AOKMAN DRIVE

RV系列蜗轮蜗杆减速机 & UD系列无级变速机

RV Series Worm Gearbox & UD Series Speed Variator

郑州澳柯熳机械设备有限公司

Zhengzhou AOKMAN Machinery Co., Ltd.

郑州澳柯熳机械设备有限公司
Zhengzhou AOKMAN Machinery Co., Ltd.

Add: 中国・郑州经开区航海东路1394号
Add: No.1394, Hanghai Road, Zhengzhou, China
Tel: +86-371-53667898 Fax: +86-371-86027652
Skype: aokman-gearbox
Email: aokman@aokman-drive.com
Website: www.aokman-gearbox.com

AOKMAN PROFILE

A high product quality, a wide production and a flexible structure are the strong points of Aokman®. Aokman® was founded in 1982, specialized in R & D and manufacturing of gearboxes, gears, shaft, motor and spare parts.

We can offer the proper solution for uncountable applications. Our products are widely used in the ranges of metallurgical, steel, mining, pulp and paper, sugar and alcohol market and various other types of machines. With a strong presence in the international market, we export mainly to South America, Middle East, North America and Asia. Our pillars are firmly planted in the relentless pursuit of excellence, innovation and competitiveness. The technology base stands out in our operation, featuring the latest equipment and the most modern information technology.

We are committed to win a partner rather than a simple supplier. Aokman® has become a reliable supplier, able to supply high quality gearboxes. In fact, the entire production is developed inside our Company, thus it is submitted to an appropriate process control.

The products quality of Aokman® allied to the security and efficiency of its management which makes its brand synonymous with credibility and transparency with its suppliers and customers. Make a good deal, always consult Aokman® professionals! With 33 years experience, we assure you the utmost reliability and security for both product and services.

结构分解图 / Structure diagram 01
产品概述 / Sunmarize 02
型号说明 / Model illuminate 03
选型相关参数 / Relevant parameter 04-10
NMRV减速机啮合参数 / Mesh data 11
NMRV减速机选型表 / Gear unit selection tables 12-15
NMRV性能参数 / Performance parameter 16-31
DRV减速机型式 / DRV Deceleration type 32
DRV减速机选型表 / Gear unit selection tables 33-34
DRV性能参数 / Performance parameter 35-39
外形尺寸图表 / Outline dimension sheet 40-43
NMRV连接尺寸图表 / Connecting dimension sheet 44-47
附件尺寸图表 / Accessories outline dimension sheet 48-49
安装方位图 / Installation positions diagram 50-52
产品型式 / Type 53
结构分解图 / Structure diagram 54-55
产品概述 / Summarize 56
型号说明 / Model Illuminate 57-58
UD外形尺寸图表 / Outline dimension sheet 59-61
安装方位图 / Installation positions diagram 62-63
型号说明 / Model illuminate 64
NMRV+UD外形尺寸图表 / Outline dimension sheet 65-66
NMRV+UD性能参数 / Performance parameter 67-70
安装方位图 / Installation position diagram 71
安装方法 / Installation methods 72
安装使用与保养 / Installation usage & maintenance 73-74
使用须知 / Instruction 75-76
润滑油 / Lubrication 77-78
订货须知 / Notice for ordering 79
运转故障 / Mulfunctions 80
减速机负载特征表(参考件) / Mcharge characteristic chart(for referebce) 81-82

蜗轮蜗杆减速机

NMRV SERIES WORM GEAR UNITS

结构分解图 / STRUCTURE DIAGRAM

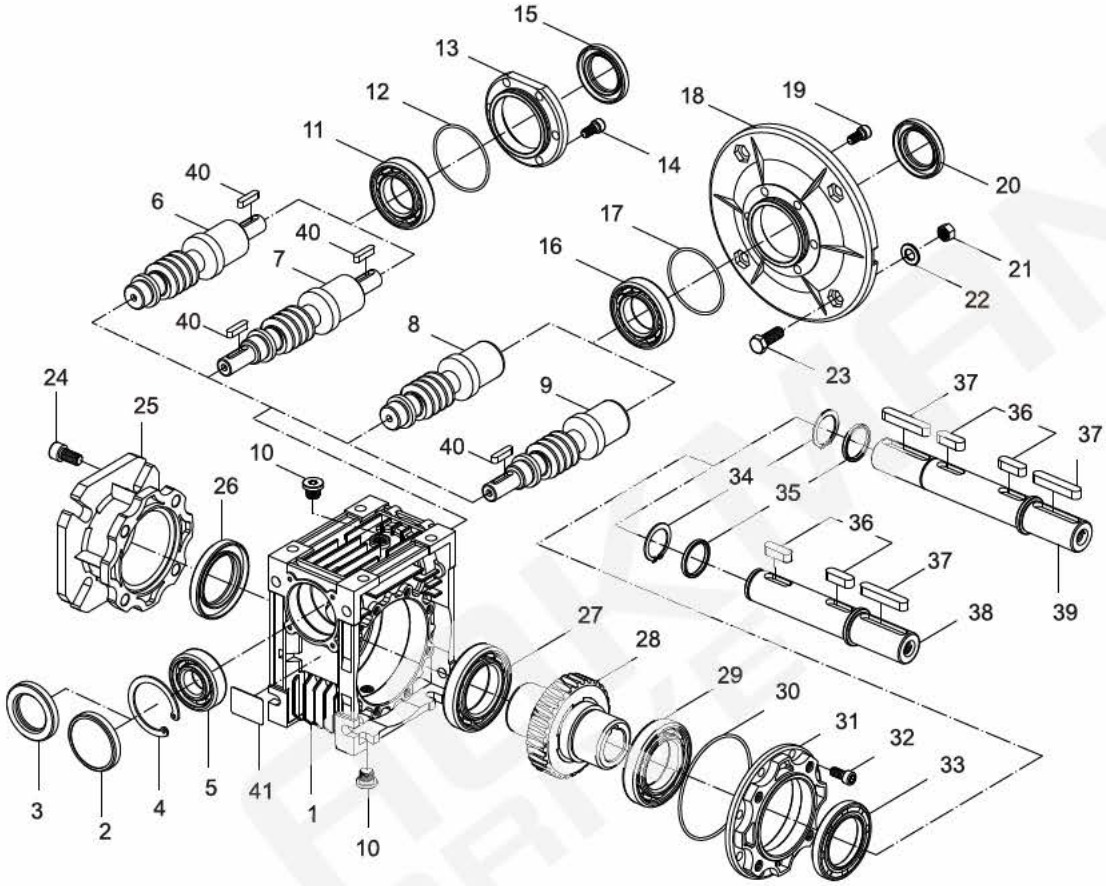

1	箱体 / Cablint	22	垫圈 / Washer
2	油封盖 / Closing cap	23	外六角螺栓 / Six hexagon bolt
3	油封 / Oil seal	24	内六角螺钉 / Inner hex screw
4	孔用挡圈 / Hole-circlip	25	输出法兰 / Output flange
5	轴承 / Bearing	26	油封 / Oil seal
6	轴输入蜗杆 / Input shaft worm	27	轴承 / Bearing
7	双轴输入蜗杆 / Double input worm	28	蜗轮 / Worm gear
8	孔输入蜗杆 / Input hole worm	29	轴承 / Bearing
9	孔输入轴输入蜗杆 / Input shaft and hole worm	30	O型橡胶密封圈 / O-ring
10	油塞 / Oil plug	31	输出端盖 / Bearing support cover
11	轴承 / Bearing	32	内六角螺钉 / Inner hex screw
12	O型橡胶密封圈 / O-ring	33	油封 / Oil seal
13	轴承座 / Bearing block	34	轴用挡圈 / Shaft-circlip
14	内六角螺钉 / Inner hex screw	35	垫圈 / Washer
15	油封 / Oil seal	36	键 / Key
16	轴承 / Bearing	37	键 / Key
17	O型橡胶密封圈 / O-ring	38	单向输出轴 / Single output shaft
18	输入法兰 / Intput flange	39	双向输出轴 / Double output shaft
19	内六角螺钉 / Inner hex screw	40	键 / Key
20	油封 / Oil seal	41	铭牌 / Nameplate
21	外六角螺母 / Six hexagon nut		

产品概述 / SUMMARIZE

结构特点 / Structure Features

1. 优质铝合金铸造箱体，适应全方位的万能安装配置；
2. 充分的冷却筋条，使机体具有优良的热传导性能；
3. 从025-150共10种机座规格；传递功率范围从60W-15kW;
4. 速比范围大，每单个机座具有从5：1到100：1的12种减速比；
5. 精密磨削加工的硬齿面传动蜗杆，效率高、输出扭矩大；
6. 低噪声平稳运转，能适合在恶劣环境中长期连续工作；
7. 重量轻，机械强度高；
8. 模块化组合DRV将NMRV减速机的传动比拓展至：i=5--5000

1. high quality die casting aluminum alloy housing ,suitable for universal mounting .
2. Heat sink design for cooling provides great surface area and higher thermal capacity than the casting iron housings
3. NMRV 025 to 150,with power scope from 60W to 15kW.
4. Larger speed ratio range .each single frame size has 12 ratios from 5:1 to 100:1
5. Hardened worm with fine grinding has the features of higher efficiency and big output torque .
6. Low noise and stably running ,can adapt long term work condition in terrible environments
7. Light weight ,high mechanical strength .
8. Modularization combination DRV extend the ration of NMRV reducers from i=5:1 to 5000:1.

主要材料 / Main Materials

1. 外壳：铝合金（机座：025－090），铸铁（机座：110－150）；
2. 蜗杆：20Cr，渗碳淬火，齿面硬度58－62HRC，精磨后保持渗碳层厚度0.3－0.5mm；
3. 蜗轮：耐磨镍青铜。

1. Housing: die-cast aluminum alloy(frame size 025 to 090);cast iron(frame size:110 to 150);
2. Worm: 20Cr, carbonize&quencher heat treatment make the hardness of gear's surface up to 58-62HRC,retain carburized layer's thickness between 0.3 and 0.5mm after accurate grinding.
3. Worm wheel:wearable nickel bronze alloy.

表面涂装 / Surface Painting

铝合金外壳：

1.先抛丸处理，再经特种防腐处理，保持银白金属感，并耐汽油、二甲苯等有机溶剂的腐蚀；

2.磷化处理后，再喷RAL5010蓝色或RAL7035浅灰色涂料。

铸铁外壳：先涂红色防锈漆，后喷涂RAL5010蓝色或RAL7035浅灰色涂料。

Aluminum alloy housing:

1. Shot blasting and special antiseptic treat-ment on the aluminum alloy surface.
2. After phosphating, paint with RAL5010 blue or RAL7035 grey paint.

Cast iron housing: First paint with red antirust paint, then paint white RAL5010 blue or RAL7035 grey paint.

型号说明 / MODEL ILLUMINATE

减速机 / Gear unit　　电机 / Motors

NMRV 063 / 50 / E / FA1 / SS1 / 71B5 / B3 / 0.37-4P / BMG / 1 / X

① ② ③ ④ ⑤ ⑥ ⑦ ⑧ ⑨ ⑩ ⑪ ⑫

NO.	说明	Comments
1	减速机系列代号： NMRV:孔输入带输入法兰 NRV：轴输入不带输入法兰 DRV:双蜗轮蜗杆减速机（NMRV+NMRV/NRV+NMRV）	Code for gear units series： 1. NMRV:Hole input with flange 2. NRV：Shaft input without flange 3. DRV:Combination worm gear units（NMRV+ NMRV/NRV+NMRV）
2	蜗轮蜗杆减速机中心距（规格） NMRV:025,030,040,050,063,075,090,110,130,150 DRV:030/063…….	Central distance of worm gear units(spec) NMRV:025,030,040,050,063,075,090,110,130,150 DRV:030/063…….
3	减速机速比 NMRV:i=5,7.5,10,15,20,25,30,40,50,60,80,100 DRV:i=100……..5000	Speed ratio of reducer 1.NMRV:i=5,7.5,10,15,20,25,30,40,50,60,80,100 2.DRV:i=100…..5000
4	无代号表示不带蜗杆同向尾出轴 E：带蜗杆同向尾出轴	1.No mark means single extension worm shaft 2.E:Double extension worm shaft
5	1.无代号表示不带输出法兰 2.FA,FB,FC,FD,FE(1/2):输出法兰代号和位置	1.No mark means without output flange 2.FA、FB、FC、FD、FE(1/2):output Flange and position
6	1.无代号表示孔输出 2.SS(1/2):单向输出轴和位置 3.DS：双向输出轴	1.No mark means hole output 2.SS(1/2):Single output shaft and position 3.DS:Double output shaft
7	输入法兰规格形式（不带电机时） 1.71B5： IEC输入法兰及规格代号 2. 56C: NEMA输入法兰及规格代号 3. ST80： 伺服电机输入法兰规格代号	Normal from of input flange (without motor) 1.71B5:IEC input flange code 2. 56C: NEMA input flange code 3. ST80：Servo motor input flange code
8	安装方位代号	Installation position code
9	1.无代号表示不带电机 2.0.37-4P: 电机功率、级数 3.80ST-M01330:伺服电机型号	1. No mark means without motor 1.0.37-4P: Model motors(poles of power) 2.80ST-M01330: Servo motor type
10	1.无代号表示不带制动器 2.BMG:制动器	1.No mark means without brake 2.BMG:brake
11	电机接线盒位置，默认位置1可以不写	Position of motor terminal box default position 1 no need to mark
12	电机进线位置，默认位置X 可以不写	Coil position for motor , default position X no need to mark

注：订单时请确认是否带电机，一般按不带电机供应。

NOTE: When ordering, you should confirm whether the reducers are equipped with motors, otherwise reducers are usually supplied without motors.

示例Example：NMRV063 / 60 / FA2 / 80B5

选型相关参数 / RELEVANT PARAMETER

功 率 P

$P_1=P_2/\eta$ (kW)
$P_{1n} \geqslant P_1 \cdot fs$(kW)

P_1 输入功率
P_{1n} 输入电机额定功率
η 传动效率
P_2 输出功率
fs 服务系数

在NMRV蜗轮蜗杆减速机选型表中，这个功率P_{1n}是指在输入转速为n_1并且对应的服务系数fs=1时，减速机的安全输入功率，单位kW。
传动效率η值是减速机经过足够长时间的跑合后计算得到的。跑合后在动转过程中，表面温度下降并最终稳定。需要特别强调的是样本中给定的额定转矩值M_{2n}应该考虑到传动效率η的关系。

POWER P

$P_1=P_2/\eta$ (kW)
$P_{1n} \geqslant P_1 \cdot fs$(kW)

P_1 Input power
P_{1n} Rated input motor power
η Transmission efficiency
P_2 Output power
fs Service factor

The parameter can be found in the NMRV gear-box rating charts and P_{1n} represents the kW that can be safely transmitted to the gearbox, based on input speed n_1 and service factor fs=1.
Values of η are calculated for gearboxes after a sufficiently in oreration reduces and finally stabilizes. After the running-in process in motion,surface temperature of gearbox drops and eventually gets stable. It must be worth high lighting that values of rated torque M_{2n} given in the catalogue take the transmission efficiency η into consideration.

转速 n / Rotation speed n

n_1 减速机输入转速
n_2 减速机输出转速
若是减速箱外部传动装置驱动，为了优化工作条件和提高使用寿命，建议使用1400r/min或更低转速。

n_1 Gear units input speed
n_2 Gear units output speed
If driven by the external gearing, 1400r/min or lower rotation speed is suggested so as to optimize the working conditions and prolong the service life.

传动比 i / Transmission ratio i

$i=n_1/n_2$

扭矩 M / Torque m

$M_2=9550 \cdot P_1 \cdot \eta / n_2$(Nm)
$M_{2n} \geqslant M_2 \cdot fs$(Nm)

M_2 输出扭矩
M_{2n} 额定输出扭矩
P_1 输入功率
η 传动效率
fs 服务系数

$M_2=9550 \cdot P_1 \cdot \eta / n_2$(Nm)
$M_{2n} \geqslant M_2 \cdot fs$(Nm)

M_2 Output torque
M_{2n} Rated output torque
P_1 Input power
η Transmission efficiency
fs Service factor

Web: www.aokman gearbox.com Email: aokman@aokman drive.com

选型相关参数 / RELEVANT PARAMETER

服务系数 fs / Service factor fs

减速机上的从动机构的受驱动效果是用服务系数fs这个系数来衡量的。该服务系数根据每天的运转时间和启动频率Z而定的。三种负载分类取决于惯性加速系数，在下图中可读取实际应用的服务系数，按这图表选取的服务系数必须小于或者等于性能参数表中提供的服务系数。

The effect of the driven machine on the gear unit is taken into account to a sufficient level of accuracy using the service factor fs.The service factor is determined according to the daily operating time and the starting frequency Z.Three load classifications are considered depending on the mass acceleration factor .You can read off the service factor applicable to your application in following figure. The service factor selected using this diagram must be less than or equal to the service factor as given in the performance parameter table.

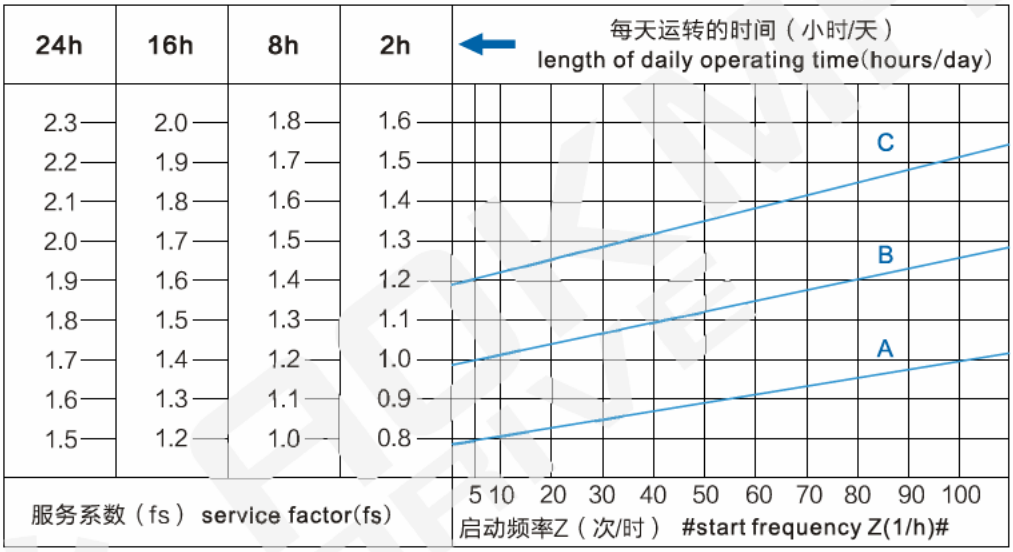

- 启动频率Z：周期包括所有启动，制作的次数以及变速电机高低速变化时的次数。
- Starting frequency Z:The cycles include all starting and braking procedures as well as change overs from low to high speed.

负载类型 / Load classifications

负载性质：

A. 均匀冲击负载，允许惯性加速系数Fa≤0.3
B. 中等冲击负载，允许惯性加速系数Fa≤3
C. 重冲击负载，允许惯性加速系数Fa≤10

Type of load:

A. Uniform ,permitted mass acceleration factor Fa≤0.3
B. Moderate shock load,permitted mass acceleration factor Fa≤3
C. Heavy shock load,permitted mass acceleration factor Fa≤10

选型相关参数 / RELEVANT PARAMETER

负载类型：

轻负载的螺杆输送，风扇，装备线，输送带，小型搅拌器，电梯，清洗机器，过滤器，控制驱动。
卷扬机，木工机器进料器，货物起重机，平衡器，绞螺纹机器，中型搅拌器，重型输送带，绞盘，滑动闸门，挂料机，包装机械，混凝土搅拌机，行车驱动装置，铣床，齿轮泵。
大型搅拌器，剪床，压机，离心机，旋转支撑装置，重型绞盘和起重机，磨床，石材打磨机，翻斗机，钻床，冲床，凸轴压机，摺床，机床转盘，翻桶装置，振荡装置，破碎机。

Load Classifications:

Screw feeders for light materials,fans,assermbly lines,conveyor belts for light materials,small mixers,lifts,cleaning machines,medium mixers,conveyor belts for heavy materials,winches,sliding doors,fertilizer scrapers,packing machines,concrete mixers,crane mechanisms,milling cutters,folding machines,gear pumps.
Mixers for hravy materials,shears,presses centrifuges,rotating supports,winches and lifts for heavy materials,grinding lathes,stone mills,bucket elevators,drilling machines,hammer mills,campresses,folding machines,turntables,tumbling barrels,vibrators,shredders.

惯性加速系数 / Mass acceleration factor

惯性加速系数计算如下：

Fa=Jc/Jm

Fa惯性加速系数
Jc所有外部传动惯量（kgm2）
Jm驱动电机的传动惯量（kgm2）
如果惯性加速系数Fa>10，请与我们技术部联系。

受环境温度影响，服务系数fs仍须按以下调整：
1.环境温度30～40℃：fs×（1.1～1.2）
2.环境温度40～50℃：fs×（1.3～1.4）
3.环境温度50～60℃：fs×（1.5～1.6）
4.环境温度>60℃，请与我们技术服务人员联系。

为了保持减速机的使用寿命，从产品样本中所选择的服务系数fs应等于或略高于计算出的服务系数fs。

The mass acceleration factor is calculated as follows:

Fa=Jc/Jm

Fa Mass acceleration factor
Jc All external mass moments of inertia(kgm2)
Jm Mass moment of inertia on the motor end(kgm2)
If mass acceleration factors fa>10,please call our Technical Service.

Service factor fs should be adjusted as followings:
1. Ambient temperature is 30～40℃：fs×（1.1～1.2）
2. Ambient temperature is 40～50℃：fs×（1.3～1.4）
3. Ambient temperature is 50～60℃：fs×（1.5～1.6）
4. Ambient temperature is >60℃ ,please call our Technical Service.

To keep the service-life of gear units,use factor fs selected from the catalogue must be equal or slightly higher than the calculated use factor fs.

径向载荷 Fr / Radial loads Fr

在决定影响径向载荷时，安装在轴端上的传动件类型必须考虑在内，不同类型的传动对应不同的传动附加系数fz，列表如下：

When determining the resulting radial loads,the type of transmission elements,mounted on the shaft end must be considered,varous transmission elements are corresponding with following transmission element factors fz.

Web: www.aokman gearbox.com Email: aokman@aokman drive.com

选型相关参数 / RELEVANT PARAMETER

传动件 Transmission element	传动附加系数fz Transmission element factor fz	注释 Comments
齿轮 Gears	1.00	≥17齿 teeth
	1.15	<17齿 teeth
链轮 Chain sprockets	1.00	≥20齿 teeth
	1.25	<20齿 teeth
	1.40	<13齿 teeth
V 带轮 Narrow V-belt pulleys	1.75	有预紧力作用 Influence of the tensile force
平带轮 Flat belt pulleys	2.50	有预紧力作用 Influence of the tensile force
齿带轮 Toothed belt pulleys	2.50	有预紧力作用 Influence of the tensile force

作用在轴上的径向载荷按如下公式计算：

$$Fr=\frac{M\cdot 2000\cdot fz}{d_0}\ (N)$$

Fr 作用在轴上的载荷（N）
M 作用在轴上的扭矩（Nm）
d_0 安装在轴上传动件的平均直径（mm）
fz 传动附加系数

The overhung loads exerted on the motor or gear shaft is calculated as follows.

$$Fr=\frac{M\cdot 2000\cdot fz}{d_0}\ (N)$$

Fr Resultingradial load (N)
M Torque on the shaft (Nm)
d_0 Mean diameter of the mounted transmis sion element in (mm)
fz Transmission element factor

当径向负荷不作用在轴中点时，按以下公式计算有效负荷：

$$F\times L=\frac{F_{r2}\cdot a}{(b+x)}\ (N)$$

F_{r2} 依据下面表格给出中底脚安装式齿轮减速机的许可径向载荷（X=L/2）（N）
a,b 减速机径向换算常量（mm）
x 轴肩到实际作用点的距离（mm）
a,b,F_{r2} 的数值在下面表格给出：

The allowed radial load force on the shaft is calculated with the following formula:

$$F\times L=\frac{F_{r2}\cdot a}{(b+x)}\ (N)$$

F_{r2} Permitted overhung load(X=L/2)for foot-mounted gear units according to the selection tables in(N)
a,b Gear unit constant for overhung load conversion(mm)
x Distance from the shaft shoulder to the force application point in(mm)

The values of a,b,F_{r2} are biven in the following tables:

当径向和轴向负载同时存在时，最大的允许轴向负载值只是径向负载值的1/5，图表中所表示的是输出轴的最大承重量。

The maxium admissible axial loads are 1/5 of the value of the given radial load when they are applied in combination with the radial load.The tables relating to the output shafts give the maximum admissible value.

选型相关参数 / RELEVANT PARAMETER

输出轴径向载荷 /Output shafts radial loads

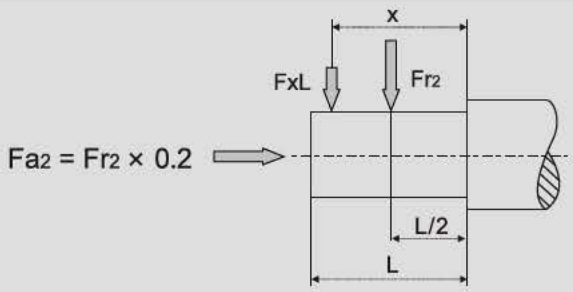

Fa_2 = 输出轴向载荷 Output axial loads

NMRV	025	030	040	050	063	075	090	110	130	150
a	50	65	84	101	120	131	162	176	188	215
b	38	50	64	76	95	101	122	136	148	174
$F_{r2\,max}$	1350	1830	3490	4840	6270	7380	8180	12000	13500	18000

输入轴径向载荷 / Input shafts radial loads

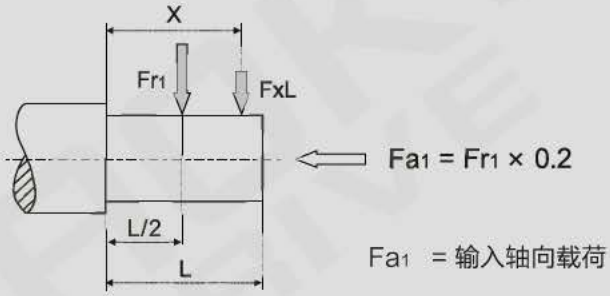

Fa_1 = 输入轴向载荷 Input axial loads

NRV	030	040	050	063	075	090	110	130	150
a	86	106	129	159	192	227	266	314	350
b	76	94.5	114	139	167	202	236	274	310
$F_{r1\,max}$	210	350	490	700	980	1270	1700	2100	2800

选型表注释 / Selection tables comments

P_{1n}	输入电机额定功率（kW）	P_{1n}	Rated power driving motor (kW)
n_2	输出转速（r/min）	n_2	Output speed (r/min)
M_{2n}	额定输出扭矩（Nm）	M_{2n}	Rated output torque (Nm)
$M_{2\,max}$	最大允许输出扭矩（Nm）	$M_{2\,max}$	Permissible output torque (Nm)
i	减速机速比	i	Gear unit ratio
fs	服务系数	fs	Service factor
	RV减速机型号		RV Gear unit type
	DRV减速机型号		DRV gear unit type
	电机型号		Motor type

Web: www.aokman gearbox.com Email: aokman@aokman drive.com

选型相关参数 / RELEVANT PARAMETER

选型举例分析 / Selection example

减速电机

例：被驱动设备所需功率0.5kW，n_1=1400r/min，均匀冲击负载，启动频率20次/小时，24小时连续运行，环境温度32℃，输出转速n_2=93.3r/min，减速电机要求B3安装方位，则：

$$i=\frac{n_1}{n_2}=\frac{1400}{93.3}=15$$

查P11 页啮合参数表,估计当i=15时, η_d=0.82查看调整服务系数得fs=1.53×1.12=1.714,$P_{1n}\geqslant P_2/\eta_d\cdot fs$=0.5/0.82×1.714=1.045(kW),查NMRV系列性能参数表可确定减速电机型号为:

NMRV075/15/B3/1.1-4P,输出扭矩M_2计算:

$$M_2=\frac{9550\cdot P_2}{n_2}=\frac{9550\times 0.5}{93.3}=51.18\ (Nm)$$

$$M_{2n}=95\geq M_2\cdot fs=51.18\times 1.714=87.72\ (Nm)$$

GEAR MOTOR

Exampie:The input power of driver machine is 0.5kW,n_1=1400r/min,uniform,start up frequency 20(1/h),continuous running for 24hours,the ambient temperature is 32℃, n_2=93. 3r/min, B3 mounted so:

$$i=\frac{n_1}{n_2}=\frac{1400}{93.3}=15$$

Check mash table on P11,estimate when the i=15,η_d=0.82. Check and adjust the service factor,will get fs=1.53×1.12=1.714.$P_{1n}\geqslant P_2/\eta_d\cdot fs$=0.5/0.82×1.714=1.045(kW).

Choose type:**NMRV075/15/B3/1.1-4P**

$$M_2=\frac{9550\cdot P_2}{n_2}=\frac{9550\times 0.5}{93.3}=51.18\ (Nm)$$

$$M_{2n}=95\geq M_2\cdot fs=51.18\times 1.714=87.72\ (Nm)$$

减速机

例：被驱动设备所需扭矩为300Nm，工作8小时连续运行，均匀冲击负载，启动频率5次/小时，环境温度30℃，即可选用系数fs=1.2×1.1=1.32,减速机输入转速n_1=900r/min，输出转速n_2=22.5r/min。

$$M_{2n}\geq M_2\cdot fs=300\times 1.32=396\ (Nm)$$

$$i=\frac{n_1}{n_2}=\frac{900}{22.5}=40$$

查NMRV系列性能参数表可确定减速机型号为：

NMRV090/40

GEAR UNITS

Example:Required torque 300Nm on driven machine,continuous running for 8 hours,uniform loda,the ambient temperature is 30℃,then choose service factor fs=1.2×1.1=1.32,n_1=900r/min,n_2=22.5r/min.

$$M_{2n}\geq M_2\cdot fs=300\times 1.32=396\ (Nm)$$

$$i=\frac{n_1}{n_2}=\frac{900}{22.5}=40$$

Choose type：**NMRV090/40**

效率与自锁特性 / Efficiency & irreversibility character

效率是减速机一个重要参数,效率η的值取决于下列参数:1.蜗轮蜗杆的螺旋角；2.输入转速；3.蜗轮蜗杆的磨合时间；4.油品、油封和轴承的性能。在第11页上的啮合参数表列出了动态效率（n_1=1400）及静态效率参数。请注意：这些参数是指减速机磨合后性能稳定的计算值。另外，样本中规定的扭矩M_{2n}也是减速机磨合性能稳定的计算值。上述的实际值可能会有上下偏差。

Efficiency is an important parmeter of reducer,efficiency η depends on the following parameters:1.helix angle of gearing;2.driving speed;3.running-in of gearing;4.The performance of oil,oil seal and bearing,the mesh date table on page 11 shows dynamic efficiency (n_1=1400) and static efficiency values.Remember that these values are only achieved after the unit has been run in.Torque values M_{2n} indicated in the catalogue are calculated by considering the steady-state performance of the gearboxes.The actual values mentioned above may be have deflection.

选型相关参数 / RELEVANT PARAMETER

动态自锁 / Dynamic irreversibilty

动态自锁是指当马达输入突然停止时，输出轴能同步停止。此条件要求动态效率 η_d<0.4（参见第11 页表格）

Dynamic irreversibility achieved when the output shaft stops instantly when drive is no longer transmitted through the worm shaft.this condition requires a dynamic efficiency of ηd<0.4(see table on page 11).

静态自锁 / Static irreversibilty

静态自锁是指当减速机处于静止状态时，输出轴上的负载不能把蜗轮推动。
此条件要求静态效率 η_s<0.5（参见第11 页表格）

Static irreversibility is achieved when the gear reducer at a standstill.The application of aload to the output shaft can't drive the worm shaft.This condition requires a static efficiency of η_s<0.5(see table on page 11).

η_d	>0.6	0.5~0.6	0.4~0.5	<0.4
动态自锁效果	动态不自锁	动态自锁很低	动态自锁良好	动态自锁
Dynamic irreversibility	Dynamic reversibility	Low dynamic reversibility	Good dynamic irreversibility	Dynamic irreversibility

η_s	>0.55	0.5~0.55	<0.5
静态自锁效果	静态不自锁	静态自锁很低	静态自锁
Dynamic irreversibility	Static reversibility	Low static reversibility	Static irreversibility

上述表格中所有参数只是供大概参考，振动和冲击也会影响减速机的自锁功能。事实上要保证完全自锁是不可能的，我们建议需要时安装外部的安全制动的装置。对于一个组合减速机自锁条件时，必须考虑单减速机的自锁功能效率，因为整体自锁功能是：$\eta_{tot} = \eta_1 \times \eta_2$

The table shows approximate irreversibility classes.Vibrations and shocks can affect a gear reducer's irreversibility.As it is virtually impossible to provide and guarantee total non reversing,we recommend the use of an external brake with sufficient capability to prevent vibrations in duced starting,where these circumstances are required.For the irreversibility conditions of a combined geared unit one must consider that the efficiency of the group is given by the product of the efficiencies of each single reducer: $\eta_{tot}=\eta_1 \times \eta_2$.

Web: www.aokman gearbox.com Email: aokman@aokman drive.com

NMRV减速机啮合参数 / MESH DATA

NMRV	i	5	7.5	10	15	20	25	30	40	50	60	80	100
025	Z1	6	4	3	2	2	–	1	1	1	1	–	–
	m	1.1	1.18	1.23	1.27	0.98	–	1.29	0.99	0.80	0.67	–	–
	γ	30° 58′	21° 48′	16° 42′	11° 19′	10° 53′	–	5° 29′	5° 29′	4° 34′	3° 23′	–	–
	η_d(1400)	0.87	0.85	0.83	0.79	0.75	–	0.67	0.62	0.58	0.55	–	–
	η_s	0.72	0.71	0.68	0.61	0.56	–	0.46	0.41	0.36	0.34	–	–
030	Z1	6	4	3	2	2	1	1.5	1	1	1	1	–
	m	1.3	1.36	1.39	1.42	1.09	1.69	1.43	1.10	0.89	0.74	0.56	–
	γ	29° 03′	20° 19′	15° 31′	10° 29′	5° 42′	6° 10′	5° 17′	2° 52′	3° 26′	2° 52′	1° 58′	–
	η_d(1400)	0.87	0.85	0.82	0.77	0.73	0.68	0.65	0.59	0.55	0.51	0.44	–
	η_s	0.72	0.67	0.63	0.55	0.5	0.43	0.39	0.35	0.31	0.27	0.23	–
040	Z1	6	4	3	2	2	2	1	1	1	1	1	1
	m	1.65	1.87	1.95	2.00	1.54	1.26	2.04	1.55	1.27	1.06	0.80	0.65
	γ	30° 58′	21° 48′	16° 42′	11° 19′	11° 19′	8° 08′	5° 43′	5° 43′	4° 05′	2° 52′	2° 52′	2° 29′
	η_d(1400)	0.89	0.87	0.85	0.82	0.78	0.75	0.7	0.65	0.62	0.58	0.52	0.47
	η_s	0.74	0.71	0.67	0.6	0.55	0.51	0.45	0.4	0.36	0.32	0.28	0.24
050	Z1	6	4	3	2	2	2	1	1	1	1	1	1
	m	2.25	2.34	2.43	2.50	1.92	1.56	2.54	1.94	1.58	1.32	1.00	0.80
	γ	30° 58′	21° 48′	16° 42′	11° 19′	11° 19′	9° 05′	5° 43′	5° 43′	4° 21′	2° 52′	2° 52′	2° 17′
	η_d(1400)	0.89	0.88	0.86	0.82	0.79	0.76	0.72	0.67	0.63	0.59	0.53	0.49
	η_s	0.74	0.7	0.66	0.59	0.55	0.51	0.44	0.39	0.35	0.32	0.27	0.23
063	Z1	–	4	3	2	2	2	1	1	1	1	1	1
	m	–	2.96	3.08	3.17	2.44	1.98	3.23	2.47	1.99	1.68	1.27	1.02
	γ	–	24° 31′	18° 53′	12° 51′	11° 19′	8° 45′	6° 30′	5° 43′	4° 24′	3° 03′	2° 52′	2° 12′
	η_d(1400)	–	0.88	0.87	0.83	0.81	0.78	0.72	0.7	0.66	0.62	0.57	0.51
	η_s	–	0.71	0.67	0.6	0.55	0.51	0.45	0.4	0.36	0.33	0.28	0.24
075	Z1	–	4	3	2	2	2	1	1	1	1	1	1
	m	–	3.53	3.70	3.83	2.94	2.39	3.92	2.99	2.41	2.02	1.54	1.24
	γ	–	28° 04′	21° 48′	14° 56′	11° 19′	11° 19′	7° 36′	5° 43′	5° 43′	3° 49′	4° 21′	2° 52′
	η_d(1400)	–	0.89	0.88	0.85	0.82	0.80	0.76	0.72	0.69	0.65	0.60	0.55
	η_s	–	0.71	0.68	0.61	0.57	0.53	0.46	0.42	0.38	0.35	0.29	0.26
090	Z1	–	4	3	2	2	2	1	1	1	1	1	1
	m	–	4.23	4.47	4.66	3.60	2.93	4.79	3.67	2.97	2.49	1.89	1.52
	γ	–	33° 41′	26° 34′	18° 26′	14° 02′	11° 19′	9° 28′	7° 08′	5° 43′	4° 46′	3° 53′	2° 52′
	η_d(1400)	–	0.9	0.89	0.86	0.84	0.82	0.78	0.75	0.72	0.69	0.63	0.59
	η_s	–	0.73	0.7	0.64	0.6	0.56	0.49	0.45	0.41	0.38	0.32	0.28
110	Z1	–	4	3	2	2	2	1	1	1	1	1	1
	m	–	5.18	5.45	5.67	4.47	3.64	5.82	4.58	3.71	3.12	2.36	1.91
	γ	–	28° 46′	22° 22′	15° 21′	14° 20′	14° 02′	7° 49′	7° 17′	7° 08′	5° 48′	4° 54′	3° 37′
	η_d(1400)	–	0.9	0.89	0.86	0.85	0.84	0.79	0.78	0.75	0.72	0.67	0.63
	η_s	–	0.72	0.69	0.63	0.62	0.59	0.48	0.48	0.44	0.41	0.36	0.32
130	Z1	–	4	3	2	2	2	1	1	1	1	1	1
	m	–	6.11	6.45	6.72	5.24	4.28	6.91	5.36	4.35	3.65	2.76	2.23
	γ	–	29° 15′	22° 47′	15° 39′	13° 47′	12° 24′	7° 58′	7° 00′	6° 17′	6° 07′	3° 56′	3° 41′
	η_d(1400)	–	0.91	0.89	0.87	0.86	0.84	0.8	0.78	0.75	0.72	0.68	0.64
	η_s	–	0.72	0.69	0.63	0.61	0.58	0.49	0.46	0.43	0.39	0.34	0.3
150	Z1	–	6	4	3	2	2	2	1	1	1	1	1
	m	–	5.55	6.155	5.55	6.155	5	4.19	6.155	5	4.19	3.16	2.55
	γ	–	29° 37′	24° 41′	15° 32′	12° 56′	11° 19′	9° 56′	6° 34′	5° 43′	5° 00′	3° 45′	2° 52′
	η_d(1400)	–	0.91	0.9	0.88	0.86	0.84	0.83	0.78	0.76	0.73	0.68	0.64
	η_s	–	0.73	0.71	0.66	0.6	0.57	0.54	0.45	0.42	0.39	0.33	0.29

备注：i–速比，Z1–蜗杆头数，γ–导程角，m–模数，η_d–动态效率，η_s–动态效率。

NOTE：i–ratio，Z1–number of teeth，γ–helical angle，m–modulus，η_d–dynamic efficiency，η_s–static efficiency。

NMRV减速机选型表 / GEAR UNIT SELECTION TABLES

NMRV减速机组合表（n_1=1400r/min）
NMRV Possible geometrical combinations（n_1=1400r/min）

NMRV		5	7.5	10	15	20	25	30	40	50	60	80	100
025	60W						NO						
	90W						NO						
030	60W												
	90W												
	120W												
	180W												
040	60W	●	●	●	●	●	●	●	●				
	90W	●	●	●	●	●	●	●	●				
	120W												
	180W												
	250W												
	370W												
	550W												
050	120W	●	●	●	●	●	●	●					
	180W	●	●	●	●	●	●	●					
	250W												
	370W												
	550W												
	750W												
063	250W	X	●	●	●	●	●	●	●	●	●	●	
	370W	X	●	●	●	●	●	●	●				
	550W	X	●	●									
	750W	X											
	1100W	X											
	1500W	X											
075	550W	X	●	●	●	●	●	●					
	750W	X	●	●	●	●	●						
	1100W	X											
	1500W	X											
	2200W	X											
	3000W	X											
	4000W	X											

Web: www.aokman gearbox.com Email: aokman@aokman drive.com

NMRV减速机选型表 /GEAR UNIT SELECTION TABLES

NMRV		5	7.5	10	15	20	25	30	40	50	60	80	100
090	750W	X	●	●	●	●	●	●	●				
	1100W	X	●	●	●	●	●	●					
	1500W	X	●	●	●	●							
	2200W	X											
	3000W	X											
	4000W	X											
110	1100W	X	●	●	●	●	●	●	●	●			
	1500W	X	●	●	●	●	●	●	●				
	2200W	X											
	3000W	X											
	4000W	X											
	5500W	X											
	7500W	X											
130	1500W	X	●	●	●	●	●	●	●	●	●		
	2200W	X	●	●	●	●	●	●	●				
	3000W	X	●	●	●	●	●	●					
	4000W	X											
	5500W	X											
	7500W	X											
150	2200W	X	●	●	●	●	●	●	●				
	3000W	X	●	●	●	●	●	●					
	4000W	X	●	●	●	●							
	5500W	X	●	●	●								
	7500W	X	●	●	●								
	11000W	X											
	15000W	X											

注：●表示允许但不推荐的配置，空格部分为不允许的配置，X表示无此速比规格。

NOTE：●Means allowed but not recommended configurations,space parts means unallowed configurations, X means no this ratio.

NMRV减速机选型表 / GEAR UNIT SELECTION TABLES

NMRV+ST伺服减速机组合表(n_1=1500r/min)
NMRV+ST Servo gear unit possible geometrical combinations(n_1=1500r/min)

NMRV	ST	5	7.5	10	15	20	25	30	40	50	60	80	100
040	100W												
	200W												
050	100W	●	●	●	●	●	●	●					
	200W	●	●	●	●	●	●	●					
	400W												
	500W												
	750W												
063	200W	X	●	●	●	●	●	●	●	●	●		
	400W	X	●	●	●	●	●	●					
	500W	X	●	●									
	750W	X											
	1000W	X											
	1500W	X											
075	500W	X	●	●	●	●	●	●					
	750W	X	●	●	●	●	●						
	1000W	X											
	1500W	X											
	2000W	X											
	3000W	X											
	4000W	X											
090	750W	X	●	●	●	●	●	●	●				
	1000W	X	●	●	●	●	●	●					
	1500W	X	●	●	●	●							
	2000W	X											
	3000W	X											
	4000W	X											
110	1000W	X	●	●	●	●	●	●	●	●			
	1500W	X	●	●	●	●	●	●	●				
	2000W	X											
	3000W	X											
	4000W	X											
	5000W	X											
	7500W	X											

Web: www.aokman gearbox.com Email: aokman@aokman drive.com

NMRV减速机选型表 / GEAR UNIT SELECTION TABLES

NMRV	ST	5	7.5	10	15	20	25	30	40	50	60	80	100
130	1500W	X	●	●	●	●	●	●	●	●	●		
	2000W	X	●	●	●	●	●	●	●				
	3000W	X	●	●	●	●	●	●					
	4000W	X											
	5000W	X											
	7500W	X											
150	2000W	X	●	●	●	●	●	●	●				
	3000W	X	●	●	●	●	●	●					
	4000W	X	●	●	●	●							
	5000W	X	●	●	●								
	7500W	X	●	●	●								
	11000W	X											
	15000W	X											

注：●表示允许但不推荐的配置，空格部分为不允许的配置，X表示无此速比规格。

NOTE：●Means allowed but not recommended configurations,space parts means unallowed configurations, X means no sach ratio.

NMRV+NEMA减速机组合表 / Possible geometrical combinations

NMRV	NEMA Flange	Available Ratios											
		5	7.5	10	15	20	25	30	40	50	60	80	100
030	48C												
040	56C												
050	56C												
063	56C												
	140TC												
075	56C												
	140TC												
	180TC												
090	56C												
	140TC												
	180TC												
110	56C												
	140TC												
	180TC												
	210TC												
130	56C												
	140TC												
	180TC												
	210TC												
150	180TC												
	210TC												

NMRV性能参数 / PERFORMANCE PARAMETER

NMRV...IEC...性能参数 / Performance parameter

P_{1n} (kW)	n_2 (r/min)	i	M_{2n} (Nm)	F_{r2} (N)	fs		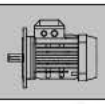
0.06	280	5	1.8	439	6.2	NMRV025 56B14	5614
	186.7	7.5	2.6	503	4.2		
	140	10	3.4	553	3.5		
	93.3	15	4.9	633	2.5		
	70	20	6.2	697	1.9		
	46.7	30	8.3	798	1.6		
	35	40	10	878	1.2		
	28	50	12	946	0.9		
	23.3	60	14	1006	0.7		
	186.7	7.5	2.6	683	7.0	NMRV030 56B5/B14	5614
	140	10	3.4	752	5.4		
	93.3	15	4.7	861	3.9		
	70	20	6	948	3.1		
	56	25	7	1021	3.1		
	46.7	30	8	1085	2.5		
	35	40	9.7	1194	1.9		
	28	50	11	1286	1.5		
	23.3	60	13	1367	1.3		
	17.5	80	14	1504	0.9		
0.09	373.3	7.5	2.0	399	3.9	NMRV025 56B14	5612
	280	10	2.6	439	3.4		
	186.7	15	3.8	503	2.4		
	140	20	4.9	553	1.8		
	93.3	30	6.7	633	1.3		
	70	40	8.5	697	1.1		
	56	50	10	751	0.9		
	186.7	7.5	3.9	503	2.8	NMRV025 56B14	5624
	140	10	5.1	553	2.4		
	93.3	15	7.3	633	1.6		
	70	20	9.3	697	1.3		
	46.7	30	13	798	1.0		
	35	40	16	878	0.8		
	373.3	7.5	2.0	542	6.5	NMRV030 56B5/B14	5612
	280	10	2.6	597	5.0		
	186.7	15	3.7	683	3.5		
	140	20	4.7	752	2.5		
	112	25	5.5	810	2.9		
	93.3	30	6.4	861	2.3		

Web: www.aokman gearbox.com Email: aokman@aokman drive.com

NMRV性能参数 / PERFORMANCE PARAMETER

NMRV...IEC...性能参数 / Performance parameter

P_{1n} (kW)	n_2 (r/min)	i	M_{2n} (Nm)	F_{r2} (N)	fs		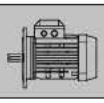
0.09	70	40	8.0	948	1.8	NMRV030 56B5/B14	5612
	56	50	9.4	1021	1.4		
	46.7	60	10	1085	1.1		
	35	80	13	1194	0.9		
	186.7	7.5	3.9	683	4.7	NMRV030 56B5/B14	5624
	140	10	5.0	752	3.6		
	93.3	15	7.0	861	2.6		
	70	20	8.8	948	2.0		
	56	25	10	1021	2.1		
	46.7	30	12	1085	1.7		
	35	40	14	1194	1.2		
	28	50	17	1286	1.0		
	23.3	60	18	1367	0.9		
	28	50	19	2475	2.1	NMRV040 56B5	5624
	23.3	60	21	2630	1.7		
	17.5	80	25	2895	1.3		
	14	100	29	3118	1.0		
0.12	373.3	7.5	2.7	399	3.0	NMRV025 56B14	5622
	280	10	3.5	439	2.6		
	186.7	15	5.1	503	1.8		
	140	20	6.5	553	1.4		
	93.3	30	9.0	633	1.0		
	70	40	11	697	0.8		
	186.7	7.5	5.2	683	3.5	NMRV030 63B5/B14	6314
	140	10	6.6	752	2.7		
	93.3	15	9.3	861	1.9		
	70	20	12	948	1.5		
	56	25	14	1021	1.6		
	46.7	30	16	1085	1.3		
	35	40	19	1194	0.9		
	28	50	22	1286	0.8		
	46.7	30	17	2087	2.7	NMRV040 63B5/B14	6314
	35	40	21	2298	1.9		
	28	50	25	2475	1.6		
	23.3	60	28	2630	1.3		
	17.5	80	33	2895	1.0		
	14	100	38	3118	0.8		
	23.3	60	29	3610	2.3		
	17.5	80	35	3973	1.9		

NMRV性能参数 / PERFORMANCE PARAMETER

NMRV...IEC...性能参数 / Performance parameter

P_{1n} (kW)	n_2 (r/min)	i	M_{2n} (Nm)	F_{r2} (N)	fs		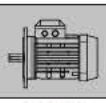
0.12	14	100	39	4280	1.4	**NMRV050 63B5**	**6314**
0.18	373.3	7.5	4.0	542	3.2	**NMRV030 63B5/B14**	**6312**
	280	10	5.2	597	2.5		
	186.7	15	7.4	683	1.8		
	140	20	9.5	752	1.3		
	112	25	11	810	1.4		
	93.3	30	13	861	1.2		
	70	40	16	948	0.9		
	186.7	7.5	7.7	683	2.3	**NMRV030 63B5/B14**	**6324**
	140	10	10	752	1.8		
	93.3	15	14	861	1.3		
	70	20	18	948	1.0		
	56	25	20	1021	1.0		
	46.7	30	24	1085	0.8		
	93.3	30	14	1657	2.5	**NMRV040 63B5/B14**	**6312**
	70	40	17	1824	1.8		
	56	50	21	1964	1.4		
	70	20	19	1824	2.1	**NMRV040 63B5/B14**	**6324**
	56	25	23	1964	1.7		
	46.7	30	25	2087	1.8		
	35	40	32	2298	1.3		
	28	50	37	2475	1.0		
	23.3	60	42	2630	0.9		
	45	20	28	2113	1.6	**NMRV040 71B5/B14**	**7116**
	36	25	34	2276	1.3		
	30	30	38	2419	1.3		
	22.5	40	47	2662	1.0		
	46.7	60	24	2865	2.1	**NMRV050 63B5**	**6312**
	35	80	30	3153	1.5		
	28	100	34	3397	1.2		
	35	40	33	3153	2.3	**NMRV050 63B5**	**6324**
	28	50	39	3397	1.9		
	23.3	60	43	3610	1.6		
	17.5	80	52	3973	1.2		
	14	100	59	4280	0.9		
	18	50	56	3936	1.4	**NMRV050 71B5/B14**	**7116**
	15	60	63	4183	1.1		
	11.3	80	75	4604	0.9		
	15	60	66	5467	2.1	**NMRV063 71B5/B14**	**7116**

Web: www.aokman gearbox.com Email: aokman@aokman drive.com

NMRV性能参数 / PERFORMANCE PARAMETER

NMRV...IEC...性能参数 / Performance parameter

P_{1n} (kW)	n_2 (r/min)	i	M_{2n} (Nm)	F_{r2} (N)	fs		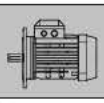
0.18	11.3	80	79	6018	1.6	**NMRV063 71B5/B14**	**7116**
	9	100	90	6270	1.4		
0.25	373.3	7.5	5.6	542	2.3	**NMRV030 63B5/B14**	**6322**
	280	10	7.2	597	1.8		
	186.7	15	10	683	1.3		
	140	20	13	752	0.9		
	112	25	15	810	1.0		
	93.3	30	18	861	0.8		
	186.7	7.5	11	1315	3.6	**NMRV040 71B5/B14**	**7114**
	140	10	14	1447	2.8		
	93.3	15	20	1657	2.0		
	70	20	26	1824	1.5		
	56	25	32	1964	1.2		
	46.7	30	35	2087	1.3		
	35	40	44	2298	0.9		
	120	7.5	17	1524	2.6	**NMRV040 71B5/B14**	**7126**
	90	10	22	1677	2.0		
	60	15	31	1920	1.4		
	45	20	39	2113	1.1		
	36	25	48	2276	0.9		
	30	30	53	2419	0.9		
	35	80	42	3153	1.1	**NMRV050 63B5/B14**	**6322**
	28	100	48	3397	0.8		
	70	20	27	2503	2.7	**NMRV050 71B5/B14**	**7114**
	56	25	32	2696	2.2		
	46.7	30	36	2865	2.3		
	35	40	46	3153	1.7		
	28	50	54	3397	1.4		
	23.3	60	60	3610	1.1		
	17.5	80	72	3973	0.9		
	45	20	40	2900	1.9	**NMRV050 71B5/B14**	**7126**
	36	25	48	3124	1.5		
	30	30	54	3320	1.7		
	22.5	40	67	3654	1.2		
	18	50	78	3936	1.0		
	15	60	88	4183	0.8		
	28	50	55	4440	2.4	**NMRV063 71B5/B14**	**7114**
	23.3	60	63	4719	2.0		
	17.5	80	76	5193	1.6		

NMRV性能参数 / PERFORMANCE PARAMETER

NMRV...IEC...性能参数 / Performance parameter

P_{1n} (kW)	n_2 (r/min)	i	M_{2n} (Nm)	F_{r2} (N)	fs		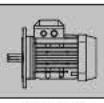
0.25	14	100	87	5595	1.4	**NMRV063 71B5/B14**	**7114**
	18	50	81	5145	1.8	**NMRV063 71B5/B14**	**7126**
	15	60	92	5467	1.5		
	11.3	80	110	6018	1.2		
	9	100	125	6270	1.0		
	17.5	80	80	6130	2.4	**NMRV075 71B5**	**7114**
	14	100	94	6603	1.9		
	11.3	80	117	7103	1.7	**NMRV075 71B5**	**7126**
	9	100	133	7380	1.4		
0.37	373.3	7.5	8.3	1044	3.4	**NMRV040 71B5/B14**	**7112**
	280	10	11	1149	2.6		
	186.7	15	16	1315	1.9		
	140	20	20	1447	1.4		
	112	25	25	1559	1.1		
	186.7	7.5	16	1315	2.5	**NMRV040 71B5/B14**	**7124**
	140	10	21	1447	1.9		
	93.3	15	30	1657	1.3		
	70	20	39	1824	1.0		
	56	25	47	1964	0.8		
	46.7	30	52	2087	0.9		
	112	25	25	2140	2.0	**NMRV050 71B5/B14**	**7112**
	93.3	30	29	2274	2.2		
	70	40	37	2503	1.6		
	56	50	44	2696	1.2		
	46.7	60	50	2865	1.0		
	35	80	62	3153	0.7		
	140	10	21	1987	3.4	**NMRV050 71B5/B14**	**7124**
	93.3	15	31	2274	2.4		
	70	20	39	2503	1.9		
	56	25	47	2696	1.5		
	46.7	30	54	2865	1.6		
	35	40	68	3153	1.1		
	28	50	80	3397	0.9		
	23.3	60	89	3610	0.8		
	120	7.5	25	2091	3.4	**NMRV050 80B5/B14**	**8016**
	90	10	33	2302	2.6		
	60	15	47	2635	1.8		
	45	20	59	2900	1.3		
	36	25	72	3124	1.0		

Web: www.aokman gearbox.com Email: aokman@aokman drive.com

NMRV性能参数 / PERFORMANCE PARAMETER

NMRV...IEC...性能参数 / Performance parameter

P_{1n} (kW)	n_2 (r/min)	i	M_{2n} (Nm)	F_{r2} (N)	fs		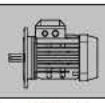
0.37	30	30	80	3320	1.1	**NMRV050 80B5/B14**	**8016**
	35	40	70	4122	2.1	**NMRV063 71B5/B14**	**7124**
	28	50	82	4440	1.6		
	23.3	60	94	4719	1.4		
	17.5	80	113	5193	1.1		
	14	100	129	5595	0.9		
	45	20	60	3791	2.4	**NMRV063 80B5/B14**	**8016**
	36	25	73	4084	1.9		
	30	30	82	4339	2.1		
	22.5	40	102	4776	1.6		
	18	50	120	5145	1.2		
	15	60	137	5467	1.0		
	23.3	60	97	5569	2.1	**NMRV075 71B5**	**7124**
	17.5	80	119	6130	1.6		
	14	100	139	6603	1.3		
	18	50	124	6073	1.8	**NMRV075 80B5/B14**	**8016**
	15	60	141	6453	1.5		
	11.3	80	173	7103	1.2		
	9	100	196	7380	1.0		
	11.3	80	185	7859	1.7	**NMRV090 80B5/B14**	**8016**
	9	100	212	8180	1.3		
0.55	373.3	7.5	12	1044	2.3	**NMRV040 71B5/B14**	**7122**
	280	10	16	1149	1.8		
	186.7	15	24	1315	1.3		
	140	20	30	1447	1.0		
	112	25	37	1559	0.8		
	140	20	31	1987	1.7	**NMRV050 71B5/B14**	**7122**
	112	25	38	2140	1.4		
	93.3	30	43	2274	1.5		
	70	40	55	2503	1.1		
	56	50	65	2696	0.8		
	46.7	60	74	2865	0.7		
	186.7	7.5	24	1805	2.9	**NMRV050 80B5/B14**	**8014**
	140	10	32	1987	2.3		
	93.3	15	46	2274	1.6		
	70	20	59	2503	1.2		
	56	25	70	2696	1.0		
	46.7	30	80	2865	1.1		

NMRV性能参数 / PERFORMANCE PARAMETER

NMRV...IEC...性能参数 / Performance parameter

P_{1n} (kW)	n_2 (r/min)	i	M_{2n} (Nm)	F_{r2} (N)	fs		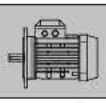
0.55	120	7.5	37	2091	2.3	NMRV050 80B5/B14	8026
	90	10	48	2302	1.7		
	60	15	69	2635	1.2		
	45	20	88	2900	0.9		
	70	40	56	3272	1.9	NMRV063 71B5/B14	7122
	56	50	68	3524	1.5		
	46.7	60	78	3745	1.2		
	35	80	96	4122	0.9		
	28	100	111	4440	0.7		
	70	20	60	3272	2.2	NMRV063 80B5/B14	8014
	56	25	72	3524	1.8		
	46.7	30	82	3745	1.9		
	35	40	104	4122	1.4		
	28	50	122	4440	1.1		
	23.3	60	140	4719	0.9		
	60	15	70	3444	2.2	NMRV063 80B5/B14	8026
	45	20	90	3791	1.6		
	36	25	108	4084	1.3		
	30	30	123	4339	1.4		
	22.5	40	152	4776	1.1		
	35	80	99	4865	1.3	NMRV075 71B5	7122
	28	100	116	5241	1.0		
	35	40	108	4865	2.0	NMRV075 80B5/B14	8014
	28	50	128	5241	1.6		
	23.3	60	144	5569	1.4		
	17.5	80	177	6130	1.1		
	14	100	206	6603	0.9		
	30	30	124	5122	2.1	NMRV075 80B5/B14	8026
	22.5	40	156	5637	1.5		
	18	50	184	6073	1.2		
	15	60	210	6453	1.0		
	.17.5	80	189	6783	1.5	NMRV090 80B5/B14	8014
	14	100	221	7306	1.2		
	18	50	196	6719	2.0	NMRV090 80B5/B14	8026
	15	60	224	7140	1.6		
	11.3	80	275	7859	1.1		
	9	100	315	8180	0.9		
	17.5	80	201	8571	2.6	NMRV110 80B5	8014
	14	100	236	9232	2.0		

NMRV性能参数 / PERFORMANCE PARAMETER

NMRV...IEC...性能参数 / Performance parameter

P_{1n} (kW)	n_2 (r/min)	i	M_{2n} (Nm)	F_{r2} (N)	fs		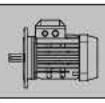
0.55	11.3	80	294	9931	1.9	NMRV110 80B5	8026
	9	100	344	10320	1.5		
0.75	373.3	7.5	17	1433	3.0	NMRV050 80B5/B14	8012
	280	10	22	1577	2.4		
	186.7	15	31	1805	1.7		
	140	20	41	1987	1.3		
	112	25	49	2140	1.0		
	93.3	30	56	2274	1.1		
	280	5	23	1577	2.7	NMRV050 80B5/B14	8024
	186.7	7.5	33	1805	2.1		
	140	10	43	1987	1.7		
	93.3	15	62	2274	1.2		
	70	20	80	2503	0.9		
	140	20	43	2597	2.3	NMRV063 80B5/B14	8012
	112	25	52	2797	1.8		
	93.3	30	60	2973	2.0		
	70	40	77	3272	1.4		
	56	50	92	3524	1.1		
	46.7	60	106	3745	0.9		
	93.3	15	63	2973	2.2	NMRV063 80B5/B14	8024
	70	20	82	3272	1.6		
	56	25	98	3524	1.3		
	46.7	30	112	3745	1.4		
	35	40	141	4122	1.0		
	120	7.5	51	2734	2.9	NMRV063 90B5/B14	90S6
	90	10	67	3009	2.3		
	60	15	96	3444	1.6		
	45	20	123	3791	1.2		
	36	25	147	4084	0.9		
	30	30	167	4339	1.0		
	46.7	60	107	4421	1.3	NMRV075 90B5/B14	8012
	35	80	135	4865	1.0		
	28	100	159	5241	0.8		
	56	25	101	4160	2.0	NMRV075 90B5/B14	8024
	46.7	30	117	4421	2.0		
	35	40	147	4865	1.5		
	28	50	174	5241	1.2		
	23.3	60	196	5569	1.0		
	60	15	97	4065	2.4	NMRV075 90B5/B14	90S6

NMRV性能参数 / PERFORMANCE PARAMETER

NMRV...IEC...性能参数 / Performance parameter

P_{1n} (kW)	n_2 (r/min)	i	M_{2n} (Nm)	F_{r2} (N)	fs		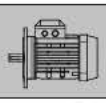
0.75	45	20	124	4474	1.9	NMRV075 90B5/B14	90S6
	36	25	149	4820	1.4		
	30	30	170	5122	1.5		
	22.5	40	213	5637	1.1		
	35	80	143	5383	1.6	NMRV090 80B5/B14	8012
	28	100	169	5799	1.2		
	28	50	182	5799	1.9	NMRV090 80B5/B14	8024
	23.3	60	209	6163	1.5		
	17.5	80	258	6783	1.1		
	14	100	302	7306	0.9		
	30	30	179	5667	2.6	NMRV090 80B5/B14	90S6
	22.5	40	226	6238	1.8		
	18	50	267	6719	1.5		
	15	60	306	7140	1.1		
	17.5	80	274	8571	1.9	NMRV110 80B5	8024
	14	100	322	9232	1.5		
	15	60	325	9023	2.1	NMRV110 90B5	90S6
	11.3	80	401	9931	1.4		
	9	100	470	10320	1.1		
	11.3	80	401	12989	2.1	NMRV130 90B5	90S6
	9	100	470	13500	1.7		
1.1	373.3	7.5	25	1433	2.1	NMRV050 80B5/B14	8022
	280	10	33	1577	1.7		
	186.7	15	48	1805	1.2		
	140	20	62	1987	0.9		
	186.7	15	46	2359	2.1	NMRV063 80B5/B14	8022
	140	20	60	2597	1.6		
	112	25	72	2797	1.2		
	93.3	30	82	2973	1.4		
	70	40	104	3272	1.0		
	120	7.5	75	2734	2.0	NMRV063 90B5/B14	90L6
	90	10	98	3009	1.6		
	60	15	140	3444	1.1		
	45	20	180	3791	0.8		
	186.7	7.5	50	2359	2.6	NMRV063 90B5/B14	90S4
	140	10	65	2597	2.0		
	93.3	15	92	2973	1.5		
	70	20	120	3272	1.1		
	56	25	144	3524	0.9		

NMRV性能参数 / PERFORMANCE PARAMETER

NMRV...IEC...性能参数 / Performance parameter

P_{1n} (kW)	n_2 (r/min)	i	M_{2n} (Nm)	F_{r2} (N)	fs		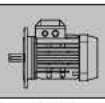
1.1	46.7	30	164	3745	1.0	NMRV063 90B5/B14	90S4
	112	25	77	3302	2.0	NMRV075 80B5/B14	8022
	93.3	30	89	3509	1.9		
	70	40	114	3862	1.4		
	56	50	137	4160	1.1		
	46.7	60	158	4421	0.9		
	90	10	98	3551	2.3	NMRV075 90B5/B14	90L6
	60	15	142	4065	1.7		
	45	20	182	4474	1.3		
	36	25	19	4820	1.0		
	30	30	249	5122	1.0		
	93.3	15	95	3509	2.1	NMRV075 90B5/B14	90S4
	70	20	122	3862	1.7		
	56	25	148	4160	1.3		
	46.7	30	171	4421	1.3		
	35	40	216	4865	1.0		
	35	80	210	5383	1.1	NMRV090 80B5/B14	8022
	28	100	248	5799	0.8		
	36	25	228	5333	1.6	NMRV090 90B5/B14	90L6
	30	30	263	5667	1.8		
	22.5	40	331	6238	1.2		
	18	50	391	6719	1.0		
	15	60	448	7140	0.8		
	35	40	222	5383	1.6	NMRV090 90B5/B14	90S4
	28	50	266	5799	1.3		
	23.3	60	306	6163	1.0		
	22.5	40	345	7882	2.3	NMRV110 90B5	90L6
	18	50	414	8491	1.8		
	15	60	476	9023	1.4		
	11.3	80	588	9931	1.0		
	28	50	278	7328	2.4	NMRV110 90B5	90S4
	23.3	60	324	7787	1.9		
	17.5	80	402	8571	1.3		
	14	100	473	9232	1.0		
	11.3	80	588	12989	1.5	NMRV130 90B5	90L6
	9	100	689	13500	1.1		
	17.5	80	408	11210	2.1	NMRV130 90B5	90S4
	14	100	480	12076	1.5		

NMRV性能参数 / PERFORMANCE PARAMETER

NMRV...IEC...性能参数 / Performance parameter

P_{1n} (kW)	n_2 (r/min)	i	M_{2n} (Nm)	F_{r2} (N)	fs		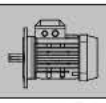
1.5	373.3	7.5	34	1433	1.5	NMRV050 80B5/B14	8032
	280	10	45	1577	1.2		
	186.7	15	65	1805	0.9		
	186.7	7.5	68	2359	1.9	NMRV063 90B5/B14	90L4
	140	10	88	2597	1.5		
	93.3	15	126	2973	1.1		
	70	20	164	3272	0.8		
	373.3	7.5	35	1873	2.7	NMRV063 90B5/B14	90S2
	280	10	45	2061	2.2		
	186.7	15	66	2359	1.6	NMRV063 90B5/B14	90S2
	140	20	86	2597	1.2		
	112	25	105	2797	0.9		
	93.3	30	120	2973	1.0		
	120	7.5	103	3227	2.1	NMRV075 100B5/B14	100L6
	90	10	134	3551	1.7		
	60	15	193	4065	1.2		
	56	50	187	4160	1.3	NMRV075 90B5/B14	90S2
	46.7	60	215	4421	1.1		
	140	10	89	3065	2.2	NMRV075 90B5/B14	90L4
	93.3	15	129	3509	1.6		
	70	20	166	3862	1.3		
	56	25	202	4160	1.0		
	46.7	30	233	4421	1.0		
	280	10	45	2433	3.2	NMRV075 90B5/B14	90S2
	186.7	15	66	2785	2.3		
	140	20	86	3065	1.9		
	112	25	105	3302	1.4		
	93.3	30	121	3509	1.4		
	70	40	156	3862	1.1		
	90	10	137	3929	2.7	NMRV090 100B5/B14	100L6
	60	15	198	4498	2.1		
	45	20	258	4951	1.5		
	36	25	310	5333	1.2		
	30	30	358	5667	1.3		
	70	20	170	4273	2.1	NMRV090 90B5/B14	90L4
	56	25	207	4603	1.6		
	46.7	30	239	4891	1.7		
	35	40	303	5383	1.2		
	28	50	363	5799	0.9		

Web: www.aokman gearbox.com Email: aokman@aokman drive.com

NMRV性能参数 / PERFORMANCE PARAMETER

NMRV...IEC...性能参数 / Performance parameter

P_{1n} (kW)	n_2 (r/min)	i	M_{2n} (Nm)	F_{r2} (N)	fs		
1.5	23.3	60	417	6163	0.8	NMRV090 90B5/B14	90L4
	56	50	197	4603	1.3	NMRV090 90B5/B14	90S2
	46.7	60	227	4891	1.1		
	45	20	264	6256	2.7	NMRV110 100B5/B14	100L6
	36	25	322	6739	2.4		
	30	30	363	7161	2.3		
	22.5	40	471	7882	1.7		
	18	50	565	8491	1.3		
	15	60	649	9023	1.1		
	35	40	315	6803	2.2	NMRV110 90B5	90L4
	28	50	379	7328	1.7		
	23.3	60	442	7787	1.4		
	17.5	80	548	8571	0.9		
	46.7	60	236	6181	2.0	NMRV110 90B5	90S2
	35	80	299	6803	1.3		
	28	100	358	7328	1.0		
	22.5	40	471	10309	2.3	NMRV130 100B5	100L6
	18	50	565	11105	1.9		
	15	60	659	11801	1.4		
	11.3	80	802	12989	1.1		
	17.5	80	557	11210	1.5	NMRV130 90B5	90L4
	14	100	655	12076	1.1		
2.2	373.3	7.5	51	1873	1.8	NMRV063 90B5/B14	90L2
	280	10	66	2061	1.5		
	186.7	15	97	2359	1.1		
	186.7	7.5	99	2785	1.9	NMRV075 100B5/B14	100L1-4
	140	10	131	3065	1.5		
	93.3	15	189	3509	1.1		
	373.3	7.5	50	2210	2.6	NMRV075 90B5/B14	90L2
	280	10	66	2433	2.2		
	186.7	15	97	2785	1.5		
	140	20	126	3065	1.3		
	112	25	154	3302	1.0	NMRV075 100B5/B14	90L2
	93.3	30	178	3509	1.0		
	186.7	7.5	100	3081	2.9	NMRV090 100B5/B14	100L1-4
	140	10	132	3391	2.3		
	93.3	15	191	3882	1.9		
	70	20	249	4273	1.4		

NMRV性能参数 / PERFORMANCE PARAMETER

NMRV...IEC...性能参数 / Performance parameter

P_{1n} (kW)	n_2 (r/min)	i	M_{2n} (Nm)	F_{r2} (N)	fs		
2.2	56	25	304	4603	1.1	NMRV090 100B5/B14	100L1-4
	46.7	30	351	4891	1.2		
	120	7.5	154	3570	2.2	NMRV090 112B5/B14	112M6
	90	10	201	3929	1.8		
	60	15	291	4498	1.4		
	45	20	378	4951	1.0		
	140	20	129	3391	2.0	NMRV090 90B5/B14	90L2
	112	25	159	3653	1.6		
	93.3	30	185	3882	1.7		
	70	40	237	4273	1.2		
	56	50	289	4603	0.9		
	70	20	255	5399	2.5	NMRV110 100B5	100L1-4
	56	25	311	5816	2.2		
	46.7	30	356	6181	2.0		
	35	40	462	6803	1.5		
	28	50	555	7328	1.2		
	23.3	60	648	7787	1.0		
	90	10	203	4965	3.5	NMRV110 112B5	112M6
	60	15	294	5684	2.6		
	45	20	388	6256	1.9		
	36	25	473	6739	1.6		
	30	30	532	7161	1.6		
	112	25	161	4616	3.1	NMRV110 90B5	90L2
	93.3	30	187	4905	3.0		
	70	40	243	5399	2.2		
	56	50	296	5816	1.7		
	46.7	60	347	6181	1.4		
	35	40	468	8897	2.2	NMRV130 100B5	100L1-4
	28	50	563	9584	1.7		
	23.3	60	657	10185	1.4		
	17.5	80	816	11210	1.0		
	36	25	473	8814	2.2	NMRV130 112B5	112M6
	30	30	539	9366	2.2		
	22.5	40	691	10309	1.6		
	18	50	829	11105	1.3		
	15	60	966	11801	1.0		
	35	80	444	8897	1.3	NMRV130 90B5	90L2
	28	100	525	9584	1.0		
	28	50	570	13103	2.5	NMRV150 100B5	100L1-4

Web: www.aokman gearbox.com Email: aokman@aokman drive.com

NMRV性能参数 / PERFORMANCE PARAMETER

NMRV...IEC...性能参数 / Performance parameter

P_{1n} (kW)	n_2 (r/min)	i	M_{2n} (Nm)	F_{r2} (N)	fs		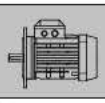
2.2	23.3	60	657	13924	1.9	NMRV150 100B5	100L1-4
	17.5	80	816	15325	1.4		
	14	100	960	16508	1.0		
3.0	373.3	7.5	68	2210	1.9	NMRV075 100B5/B14	100L2
	280	10	90	2433	1.6		
	186.7	7.5	135	2785	1.4	NMRV075 100B5/B14	100L2-4
	140	10	178	3065	1.1		
	93.3	15	258	3509	0.8		
	373.3	7.5	70	2446	3.0	NMRV090 100B5/B14	100L2
	280	10	92	2692	2.6		
	186.7	7.5	137	3081	2.1	NMRV090 100B5/B14	100L2-4
	140	10	180	3391	1.7		
	93.3	15	261	3882	1.4		
	70	20	340	4273	1.0		
	56	25	414	4603	0.8		
	46.7	30	479	4891	0.9		
	93.3	15	264	4905	2.5	NMRV110 100B5	100L2-4
	70	20	348	5399	1.9		
	56	25	425	5816	1.6		
	46.7	30	485	6181	1.5		
	35	40	630	6803	1.1		
	28	50	757	7328	0.9		
	120	7.5	210	4511	3.1	NMRV110 100B5	132S6
	90	10	277	4965	2.6		
	60	15	401	5684	1.9		
	45	20	528	6256	1.4		
	56	25	430	7607	2.2	NMRV130 100B5	100L2-4
	46.7	30	491	8084	2.1		
	35	40	638	8897	1.6		
	28	50	767	9584	1.3		
	23.3	60	896	10185	1.0		
	17.5	80	1113	11210	0.8		
	90	10	277	6494	3.5	NMRV130 132B5	132S6
	60	15	406	7434	2.6		
	45	20	528	8182	2.0		
	36	25	645	8814	1.6		
	30	30	735	9366	1.6		
	22.5	40	942	10309	1.2		

NMRV性能参数 / PERFORMANCE PARAMETER

NMRV...IEC...性能参数 / Performance parameter

P_{1n} (kW)	n_2 (r/min)	i	M_{2n} (Nm)	F_{r2} (N)	fs		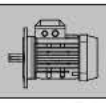
3.0	28	50	778	13103	1.8	NMRV150 100B5	100L2-4
	23.3	60	896	13924	1.4		
	17.5	80	1113	15325	1.0		
	14.0	100	1310	16508	0.8		
4.0	373.3	7.5	91	2210	1.4	NMRV075 112B5/B14	112M2
	280	10	120	2433	1.2		
	186.7	7.5	180	2785	1.0	NMRV075 112B5/B14	112M4
	140	10	237	3065	0.8		
	373.3	7.5	93	2446	2.3	NMRV090 112B5/B14	112M2
	280	10	123	2692	1.9		
	186.7	7.5	182	3081	1.6	NMRV090 112B5	112M4
	140	10	240	3391	1.3		
	93.3	15	348	3882	1.0		
	70	20	453	4273	0.8		
	140	10	240	4285	2.5	NMRV110 112B5	112M4
	93.3	15	352	4905	1.9		
	70	20	464	5399	1.4		
	56	25	566	5816	1.2		
	46.7	30	647	6181	1.1		
	120	7.5	280	4511	2.3	NMRV110 132B5	132M1-6
	90	10	369	4965	1.9		
	60	15	535	5684	1.4		
	56	25	573	7607	1.6	NMRV130 112B5	112M4
	46.7	30	655	8084	1.6		
	35	40	851	8897	1.2		
	28	50	1023	9584	1.0		
	23.3	60	1195	10185	0.8		
	120	7.5	283	5901	3.1	NMRV130 132B5	132M1-6
	90	10	369	6494	2.6		
	60	15	541	7434	2.0		
	45	20	705	8182	1.5		
	36	25	860	8814	1.2		
	28	50	1037	13103	1.4	NMRV150 112B5	112M4
	23.3	60	1195	13924	1.1		
	17.5	80	1484	15325	0.8		
5.5	186.7	7.5	250	3893	2.2	NMRV110 132B5	132S4
	140	10	330	4285	1.8		
	93.3	15	484	4905	1.4		
	70	20	638	5399	1.0		

Web: www.aokman gearbox.com Email: aokman@aokman drive.com

NMRV性能参数 / PERFORMANCE PARAMETER

NMRV...IEC...性能参数 / Performance parameter

P_{1n} (kW)	n_2 (r/min)	i	M_{2n} (Nm)	F_{r2} (N)	fs		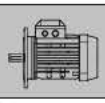
5.5	140	10	334	5605	2.5	NMRV130 132B5	132S4
	93.3	15	490	6416	1.9		
	70	20	638	7062	1.4		
	56	25	788	7607	1.2		
	46.7	30	900	8084	1.2		
	35	40	1171	8897	0.9		
	70	20	645	9654	2.0	NMRV150 132B5	132S4
	56	25	788	10400	1.5		
	46.7	30	934	11051	1.3		
	35.0	40	1171	12163	1.3		
	28.0	50	1426	13103	1.0		
	23.3	60	1643	13924	0.8		
7.5	186.7	7.5	341	3893	1.6	NMRV110 132B5	132M4
	140	10	450	4285	1.3		
	93.3	15	660	4905	1.0		
	186.7	7.5	345	5092	2.2	NMRV130 132B5	132M4
	140	10	455	5605	1.8		
	93.3	15	668	6416	1.4		
	70	20	870	7062	1.0		
	56	25	1074	7607	0.9		
	46.7	30	1228	8084	0.8		
	35	40	1596	8897	0.7		
	70	20	880	9654	1.5	NMRV150 132B5	132M4
	56	25	1074	10400	1.1		
	46.7	30	1274	11051	0.9		
	35	40	1596	12163	1.0		
11	186.7	7.5	512	6962	2.3	NMRV150 160B5	160M4
	140	10	675	7663	1.8		
	93.3	15	990	8771	1.3		
	70	20	1291	9654	1.0		
	56	25	1576	10400	0.8		
15	186.7	7.5	698	6962	1.7	NMRV150 160B5	160L4
	140	10	921	7663	1.3		
	93.3	15	1351	8771	0.9		
	70	20	1760	9654	0.7		

DRV减速机型式 / DRV DECELERATION TYPE

NMRV减速机本身可以组合成一个双级联体减速机（DRV）。DRV的传动比即为第一级NMRV和第二级NMRV传动比的乘积，可将传动比拓展至i=300-3200的范围。
DRV并不是两个NMRV的简单组合，合理的组合应使两个减速机达到一致的工况。因此第二级减速机的机座规格要大于第一级减速机的机座规格。

NMRV reducers can be combined as a double reducers combination (DRV). The ratio of DRV is just the product of the first stage NMRV′ s ratio. So the ratio can be extended to i=300-3200.
DRV is not only simply combination of two NMRV reducers.the reasonably combinations should make two reducers operating at same condition.therefore the frame size of the second stage reducer should be bigger than the first stage reducer.

DRV减速机选型表 / GEAR UNIT SELECTION TABLES

DRV减速机组合表 / DRV Possible geometrical combinations

NMRV+NMRV	i=i1*i2	100	150	200	250	300	400	500	600	750	900
	n2	14	9.3	7	5.6	4.7	3.5	2.8	2.3	1.9	1.6
DRV025/030	0.06kW		10*15	10*20	10*25	10*30	20*20	20*25	20*30	30*25	30*30
	0.09kW	10*10									
DRV025/040	0.06kW					10*30	10*40	20*25	20*30	30*25	30*30
DRV030/040	0.06kW					10*30	10*40	20*25	20*30	25*30	30*30
	0.09kW					10*30					
DRV030/050	0.06kW										30*30
	0.09kW						10*40	10*50	20*30	25*30	30*30
	0.12kW					10*30	10*40	10*50			
	0.18kW					10*30					
DRV030/063	0.06kW										
	0.09kW										15*60
	0.12kW							10*50	15*40	15*50	
	0.18kW					7.5*40	10*40	10*50			
DRV040/075	0.06kW										
	0.09kW										
	0.12kW										30*30
	0.18kW								20*30	25*30	30*30
	0.25kW					10*30	10*40	10*50			
	0.37kW					10*30	10*40				
DRV040/090	0.06kW										
	0.09kW										
	0.12kW										
	0.18kW										15*60
	0.25kW								15*40	15*50	15*60
	0.37kW					7.5*40	10*40	10*50	15*40		
DRV050/110	0.12kW										
	0.18kW										
	0.25kW										
	0.37kW									25*30	30*30
	0.55kW					10*30	10*40	10*50	15*40	25*30	
	0.75kW					10*30	10*40				
DRV063/130	0.25kW										
	0.37kW										
	0.55kW							10*50		25*30	
	0.75kW							10*50	15*40	25*30	30*30
	1.1kW					10*30	10*40	10*50			
	1.5kW					10*30	10*40				
DRV063/150	0.25kW										
	0.37kW										
	0.55kW										
	0.75kW							10*50	15*40	25*30	30*30
	1.1kW		10*15	10*20	10*25	10*30	10*40	10*50	15*40	25*30	
	1.5kW		10*15	10*20	10*25	10*30	10*40	10*50	15*40		

DRV减速机选型表 / GEAR UNIT SELECTION TABLES

DRV减速机组合表 / DRV Possible geometrical combinations

NMRV+NMRV	i=i1*i2	1200	1500	1800	2400	3000	3200	4000	4800	5000
	n2	1.2	0.93	0.78	0.58	0.47	0.44	0.35	0.29	0.28
DRV025/030	0.06kW	40*30	50*30	60*30	60*40	60*50				
	0.09kW									
DRV025/040	0.06kW	40*30	50*30	60*30	60*40	60*50		50*80		50*100
DRV030/040	0.06kW	30*40	50*30	60*30	60*40	60*50	80*40	80*50		50*100
	0.09kW									
DRV030/050	0.06kW	30*40	50*30	60*30	60*40	60*50		80*50	80*60	
	0.09kW									
	0.12kW									
	0.18kW									
DRV030/063	0.06kW		30*50	30*60	60*40	60*50		80*50		50*100
	0.09kW	30*40	30*50							
	0.12kW									
	0.18kW									
DRV040/075	0.06kW				60*40	60*50		80*50		100*50
	0.09kW		50*30	60*30	60*40					
	0.12kW	30*40								
	0.18kW									
	0.25kW									
	0.37kW									
DRV040/090	0.06kW					60*50		80*50		100*50
	0.09kW				60*40	60*50		80*50		
	0.12kW		30*50	30*60	60*40					
	0.18kW	30*40	30*50							
	0.25kW									
	0.37kW									
DRV050/110	0.12kW					60*50		80*50		100*50
	0.18kW			60*30	60*40					
	0.25kW	30*40	50*30	60*30						
	0.37kW	30*40								
	0.55kW									
	0.75kW									
DRV063/130	0.25kW				60*40	60*50		80*50		100*50
	0.37kW	30*40	50*30	60*30						
	0.55kW	30*40								
	0.75kW									
	1.1kW									
	1.5kW									
DRV063/150	0.25kW			60*30	60*40	60*50		80*50		100*50
	0.37kW			60*30	60*40	60*50				
	0.55kW			60*30	60*40					
	0.75kW	30*40								
	1.1kW									
	1.5kW									

Web: www.aokman gearbox.com Email: aokman@aokman drive.com

DRV性能参数 / PERFORMANCE PARAMETER

DRV性能参数 / Performance parameter

P_{1n} (kW)	n_2 (r/min)	i	M_{2n} (Nm)	F_{r2} (N)	fs	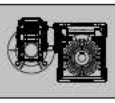	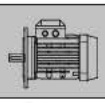
0.06	14.0	100	25	1620	1.3	DRV025/030	5614
	9.3	150	33	1830	0.9		
	7.0	200	41	1830	0.7		
	5.6	250	45	1830	0.8		
	4.7	300	56	3490	1.2	DRV025/040	5614
	3.5	400	69	3490	0.9		
	2.8	500	94	3490	0.7		
	2.3	600	100	3490	0.6		
	1.9	750	115	3490	0.5		
	1.6	900	125	3490	0.5		
	1.2	1200	153	3490	0.4		
	0.9	1500	185	3490	0.3		
	0.8	1800	198	3490	0.3		
	0.6	2400	247	3490	0.2		
	0.5	3000	280	3490	0.2		
	0.4	4000	295	3490	0.1		
	0.3	5000	348	3490	0.1		
	4.7	300	55	3490	1.3	DRV030/040	5614
	3.5	400	67	3490	0.9		
	2.8	500	88	3490	0.6		
	2.3	600	95	3490	0.7		
	1.9	750	103	3490	0.6		
	1.6	900	118	3490	0.5		
	1.2	1200	143	3490	0.4		
	0.9	1500	166	3490	0.4		
	0.8	1800	184	3490	0.3		
	0.6	2400	217	3490	0.2		
	0.4	3200	247	3490	0.2		
	0.4	4000	278	3490	0.1		
	0.3	5000	327	3490	0.1		
	1.6	900	118	4840	1.0	DRV030/050	5614
	1.2	1200	143	4840	0.7		
	0.9	1500	166	4840	0.7		
	0.8	1800	184	4840	0.7		
	0.6	2400	227	4840	0.5		
	0.5	3000	256	4840	0.4		
	0.4	4000	278	4840	0.3		
	0.3	4800	316	4840	0.3		

DRV性能参数 / PERFORMANCE PARAMETER

DRV性能参数 / Performance parameter

P_{1n} (kW)	n_2 (r/min)	i	M_{2n} (Nm)	F_{r2} (N)	fs	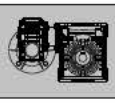	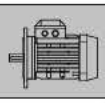
0.06	0.9	1500	173	6270	1.1	DRV030/063	5614
	0.8	1800	191	6270	0.9		
	0.6	2400	227	6270	0.8		
	0.5	3000	256	6270	0.7		
	0.4	4000	295	6270	0.6		
	0.3	5000	327	6270	0.4		
	0.6	2400	267	7380	1.1	DRV040/075	5614
	0.5	3000	305	7380	0.8		
	0.4	4000	360	7380	0.7		
	0.3	5000	409	7380	0.5		
	0.5	3000	329	8180	1.4	DRV040/090	5614
	0.4	4000	393	8180	1.3		
	0.3	5000	430	8180	1.0		
0.09	28.0	100	18	1286	1.6	DRV025/030	5612
	18.7	150	25	1472	1.1		
	14.0	200	31	1620	0.9		
	14.0	100	37	1620	0.8	DRV025/030	5624
	9.3	150	50	1830	0.6		
	7.0	200	61	1830	0.5		
	5.6	250	68	1830	0.5		
	4.7	300	77	1830	0.4		
	3.5	400	106	1830	0.3		
	2.8	500	117	1830	0.3		
	2.3	600	135	1830	0.2		
	1.9	750	149	1830	0.2		
	1.6	900	167	1830	0.2		
	1.2	1200	201	1830	0.1		
	0.9	1500	231	1830	0.1		
	0.8	1800	264	1830	0.1		
	0.6	2400	311	1830	0.1		
	0.5	3000	347	1830	0.1		
	9.3	300	43	3490	1.6	DRV025/040	5612
	7.0	400	52	3490	1.2		
	5.6	500	71	3490	0.8		
	4.7	300	82	3490	0.8	DRV030/040	5624
	3.5	400	103	4840	1.2	DRV030/050	5624
	2.8	500	120	4840	1.0		
	2.3	600	146	4840	0.9		
	1.9	750	158	4840	0.8		

Web: www.aokman gearbox.com Email: aokman@aokman drive.com

DRV性能参数 / PERFORMANCE PARAMETER

DRV性能参数 / Performance parameter

P_{1n} (kW)	n_2 (r/min)	i	M_{2n} (Nm)	F_{r2} (N)	fs	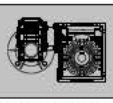	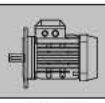
0.09	1.6	900	177	4840	0.7	DRV030/050	5624
	1.6	900	188	6270	1.0	DRV030/063	5624
	1.2	1200	222	6270	0.9		
	0.9	1500	259	6270	0.7		
	0.9	1500	305	7380	1.1	DRV040/075	5624
	0.8	1800	331	7380	1.0		
	0.6	2400	400	7380	0.7		
	0.5	3000	494	8180	0.9	DRV040/090	5624
	0.4	4000	589	8180	0.8		
0.12	4.7	300	112	4840	1.2	DRV030/050	6314
	3.5	400	138	4840	0.9		
	2.8	500	160	4840	0.7		
	2.8	500	168	6270	1.3	DRV030/063	6314
	2.3	600	199	6270	1.1		
	1.9	750	217	6270	0.9		
	1.6	900	279	7380	1.2	DRV040/075	6314
	1.2	1200	344	7380	0.9		
	0.8	1800	470	8180	0.9	DRV040/090	6314
	0.6	2400	593	8180	0.9		
	0.5	3000	731	10320	1.2	DRV050/110	6314
	0.4	4000	884	10320	1.0		
	0.3	5000	1023	10320	0.8		
0.18	3.5	400	216	6270	1.0	DRV030/063	6324
	2.8	500	252	6270	0.8		
	2.3	600	336	7380	1.1	DRV040/075	6324
	1.9	750	371	7380	0.9		
	1.6	900	419	7380	0.8		
	1.2	1200	544	8180	1.0	DRV040/090	6324
	0.9	1500	647	8180	0.8		
	0.8	1800	727	10320	1.5	DRV050/110	6324
	0.6	2400	948	10320	1.1		
0.25	7.0	400	150	6270	1.4	DRV030/063	6322
	5.6	500	175	6270	1.2		
	3.5	400	321	7380	1.1	DRV040/075	7114
	2.8	500	375	7380	0.8		
	2.3	600	488	8180	1.2	DRV040/090	7114
	1.9	750	553	8180	0.9		
	1.6	900	612	8180	0.8		
	1.2	1200	776	10320	1.3	DRV050/110	7114

DRV性能参数 / PERFORMANCE PARAMETER

P_{1n} (kW)	n_2 (r/min)	i	M_{2n} (Nm)	F_{r2} (N)	fs	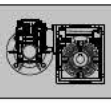	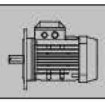
0.25	0.9	1500	924	10320	1.2	DRV050/110	7114
	0.8	1800	1010	10320	1.1		
	0.6	2400	1358	13500	1.0	DRV063/130	7114
	0.5	3000	1626	13500	0.8		
	0.4	4000	1910	13500	0.6		
	0.3	5000	2132	13500	0.5		
	0.8	1800	1199	18000	1.8	DRV063/150	7114
	0.6	2400	1446	18000	1.8		
	0.5	3000	1713	18000	1.4		
	0.4	4000	2026	18000	0.9		
	0.3	5000	2251	18000	0.7		
0.37	9.3	300	182	6270	1.3	DRV030/063	7112
	7.0	400	222	6270	1.0		
	4.7	300	383	7380	1.0	DRV040/075	7124
	3.5	400	474	7380	0.7		
	4.7	300	406	8180	1.5	DRV040/090	7124
	3.5	400	505	8180	1.2		
	2.8	500	593	8180	0.9		
	2.3	600	722	8180	0.8		
	1.9	750	837	10320	1.3	DRV050/110	7124
	1.6	900	928	10320	1.2		
	1.2	1200	1148	10320	0.8		
	0.9	1500	1444	13500	1.1	DRV063/130	7124
	0.8	1800	1586	13500	0.9		
	0.8	1800	1775	18000	1.2	DRV063/150	7124
	0.6	2400	2141	18000	1.2		
	0.5	3000	2535	18000	0.9		
0.55	9.3	300	305	8180	2.0	DRV040/090	7122
	7.0	400	375	8180	1.5		
	5.6	500	441	8180	1.2		
	4.7	300	615	10320	2.0	DRV050/110	8014
	3.5	400	810	10320	1.4		
	2.8	500	938	10320	1.1		
	2.3	600	1096	10320	1.0		
	1.9	750	1244	10320	0.9		
	2.8	500	957	13500	1.6	DRV063/130	8014
	1.9	750	1382	13500	1.2		
	1.2	1200	2057	13500	0.8		
	0.8	1800	2638	18000	0.8	DRV063/150	8014
	0.6	2400	3182	18000	0.6		

Web: www.aokman gearbox.com Email: aokman@aokman drive.com

DRV性能参数 / PERFORMANCE PARAMETER

P_{1n} (kW)	n_2 (r/min)	i	M_{2n} (Nm)	F_{r2} (N)	fs	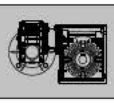	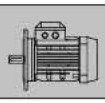
0.75	9.3	300	424	10320	2.8	DRV050/110	8012
	7.0	400	553	10320	2.1		
	5.6	500	640	10320	1.6		
	4.7	300	838	10320	1.5	DRV050/110	8024
	3.5	400	1105	10320	1.1		
	2.8	500	1305	13500	1.1	DRV063/130	8024
	2.3	600	1557	13500	1.0		
	1.9	750	1772	13500	0.9		
	1.6	900	2014	13500	0.8		
	2.8	500	1291	18000	1.8	DRV063/150	8024
	2.3	600	1529	18000	1.7		
	1.9	750	1783	18000	1.3		
	1.6	900	2215	18000	0.9		
	1.2	1200	2680	18000	1		
1.1	9.3	300	621	10320	1.9	DRV050/110	8022
	7.0	400	810	10320	1.4		
	5.6	500	938	10320	1.1		
	4.7	300	1274	13500	1.3	DRV063/130	90S4
	3.5	400	1621	13500	1.0		
	2.8	500	1913	13500	0.8		
	9.3	150	753	18000	3.1	DRV063/150	90S4
	7	200	966	18000	2.4		
	5.6	250	1175	18000	1.7		
	4.7	300	1364	18000	1.7		
	3.5	400	1619	18000	1.6		
	2.8	500	1893	18000	1.2		
	2.3	600	2242	18000	1.2		
	1.9	750	2616	18000	0.9		
1.5	9.3	300	878	13500	1.9	DRV063/130	90S2
	7.0	400	1105	13500	1.4		
	5.6	500	1305	13500	1.1		
	4.7	300	1737	13500	1.0	DRV063/130	90L4
	3.5	400	2210	13500	0.7		
	9.3	150	1026	18000	2.3	DRV063/150	90L4
	7	200	1317	18000	1.8		
	5.6	250	1602	18000	1.3		
	4.7	300	1860	18000	1.3		
	3.5	400	2208	18000	1.2		
	2.8	500	2582	18000	0.9		
	2.3	600	3057	18000	0.9		

NMRV外形尺寸图表 / OUTLINE DIMENSION SHEET

NMRV 025外形尺寸 / Outline Dimension

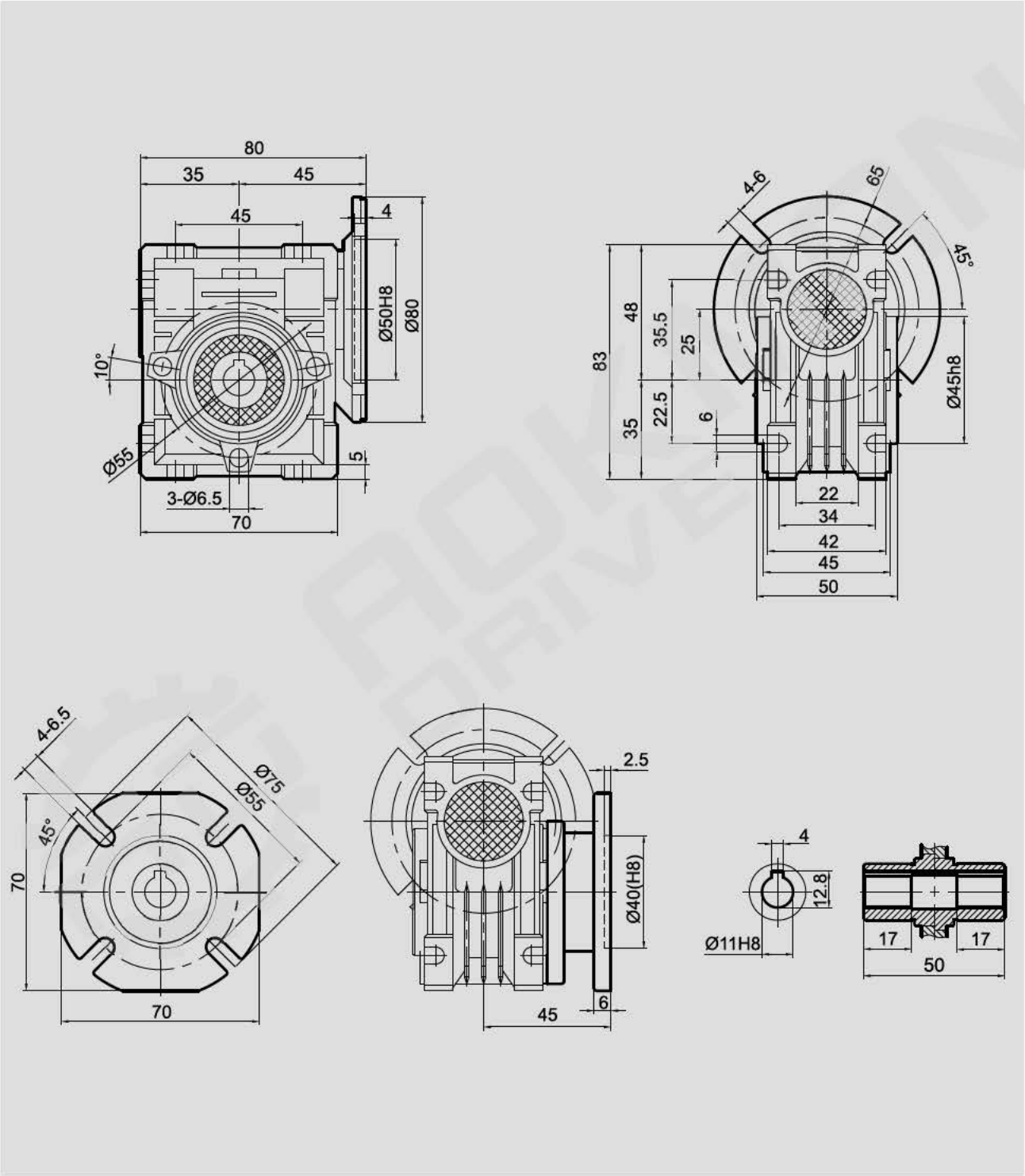

Web: www.aokman gearbox.com Email: aokman@aokman drive.com

NMRV外形尺寸图表 / OUTLINE DIMENSION SHEET

NMRV外形尺寸 / NMRV Outline Dimension

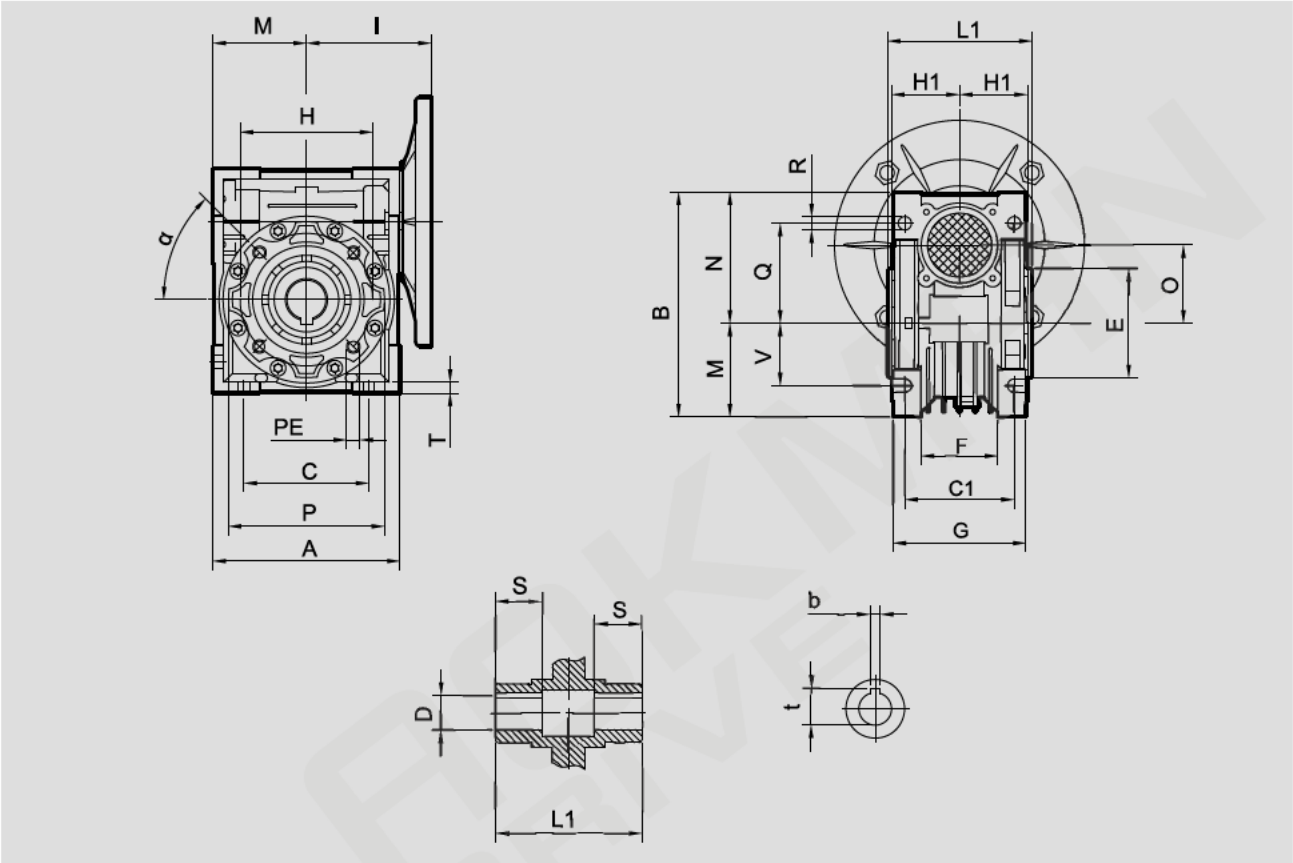

NMRV	A	B	C	C1	D(H7)	E(h7)	F	G	H	H1	I	L1	M	N	O
030	80	97	54	44	14	55	32	56	65	29	55	63	40	57	30
040	100	121.5	70	60	18(19)	60	43	71	75	36.5	70	78	50	71.5	40
050	120	144	80	70	25(24)	70	49	85	85	43.5	80	92	60	84	50
063	144	174	100	85	25(28)	80	67	103	95	53	95	112	72	102	63
075	172	205	120	90	28(35)	95	72	112	115	57	112.5	120	86	119	75
090	206	238	140	100	35(38)	110	74	130	130	67	129.5	140	103	135	90
110	255	295	170	115	42	130	-	144	165	74	160	155	127.5	167.5	110
130	293	335	200	120	45	180	-	155	215	81	179	170	146.5	187.5	130
150	340	400	240	145	50	180	-	185	215	96	210	200	170	230	150

NMRV	P	Q	R	S	T	V	PE	b	t	α	Kg
030	75	44	6.5	21	5.5	27	M6×11(n=4)	5	16.3	0°	1.2
040	87	55	6.5	26	6.5	35	M6×8(n=4)	6	20.8(21.8)	45°	2.3
050	100	64	8.5	30	7	40	M8×10(n=4)	8	28.3(27.3)	45°	3.8
063	110	80	8.5	36	8	50	M8×14(n=8)	8	28.3(31.3)	45°	6.2
075	140	93	11	40	10	60	M8×14(n=8)	8(10)	31.3(38.3)	45°	9
090	160	102	13	45	11	70	M10×18(n=8)	10	38.3(41.3)	45°	13
110	200	125	14	50	14	85	M10×18(n=8)	12	45.3	45°	42.5
130	250	140	16	60	15	100	M12×21(n=8)	14	48.8	45°	59
150	250	180	18	72.5	18	120	M12×21(n=8)	14	53.8	45°	87

注：重量（Kg）不包含电机的重量。
NOTE：Weight（Kg）without the weight of motor.

NRV外形尺寸图表 / OUTLINE DIMENSION SHEET

NRV外形尺寸 / NRV Outline Dimension

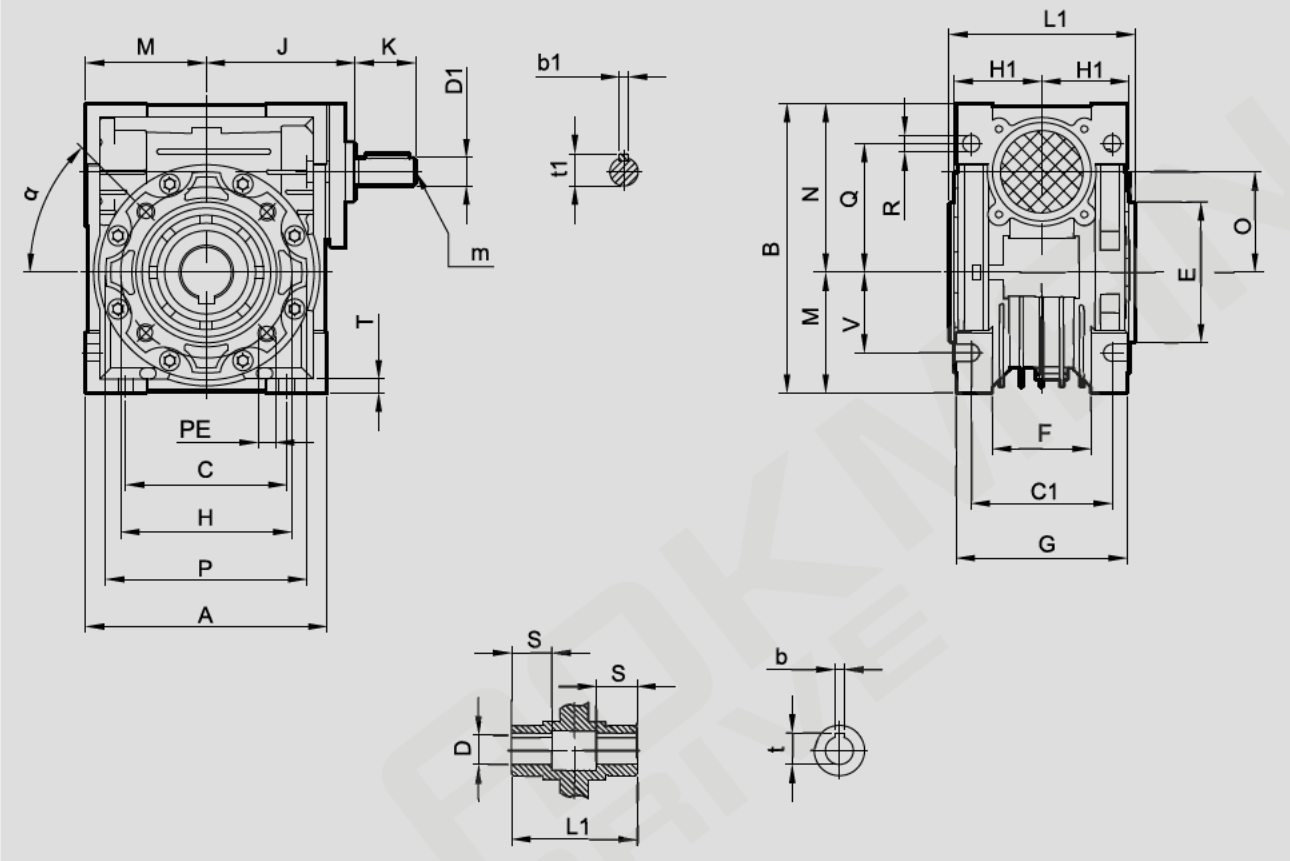

NRV	A	B	C	C1	D(H7)	D1(j6)	E(H8)	F	G	H	H1	J	K	L1	M	N	O
030	80	97	54	44	14	9	55	32	56	65	29	51	20	63	40	57	30
040	100	121.5	70	60	18(19)	11	60	43	71	75	36.5	60	23	78	50	71.5	40
050	120	144	80	70	25(24)	14	70	49	85	85	43.5	74	30	92	60	84	50
063	144	174	100	85	25(28)	19	80	67	103	95	53	90	40	112	72	102	63
075	172	205	120	90	28(35)	24	95	72	112	115	57	105	50	120	86	119	75
090	206	238	140	100	35(38)	24	110	74	130	130	67	125	50	140	103	135	90
110	255	295	170	115	42	28	130	-	144	165	74	142	60	155	127.5	167.5	110
130	293	335	200	120	45	30	180	-	155	215	81	162	80	170	146.5	187.5	130
150	340	400	240	145	50	35	180	-	185	215	96	195	80	200	170	230	150

NRV	P	Q	R	S	T	V	PE	b	b1	t	t1	m	α	Kg
030	75	44	6.5	21	5.5	27	M6×11(n=4)	5	3	16.3	10.2	-	0°	1.2
040	87	55	6.5	26	6.5	35	M6×8(n=4)	6	4	20.8(21.8)	12.5	-	45°	2.3
050	100	64	8.5	30	7	40	M8×10(n=4)	8	5	28.3(27.3)	16.0	M6	45°	3.8
063	110	80	8.5	36	8	50	M8×14(n=8)	8	6	28.3(31.3)	21.5	M6	45°	6.2
075	140	93	11	40	10	60	M8×14(n=8)	8(10)	8	31.3(38.3)	27.0	M8	45°	9
090	160	102	13	45	11	70	M10×18(n=8)	10	8	38.3(41.3)	27.0	M8	45°	13
110	200	125	14	50	14	85	M10×18(n=8)	12	8	45.3	31.0	M10	45°	42.5
130	250	140	16	60	15	100	M12×21(n=8)	14	8	48.8	33.0	M10	45°	59
150	250	180	18	72.5	18	120	M12×21(n=8)	14	10	53.8	38	M12	45°	87

注：重量（Kg）不包含电机的重量。
NOTE：Weight（Kg）without the weight of motor.

Web: www.aokman gearbox.com Email: aokman@aokman drive.com

DRV外形尺寸图表 / OUTLINE DIMENSION SHEET

DRV外形尺寸 / DRV Outline Dimension

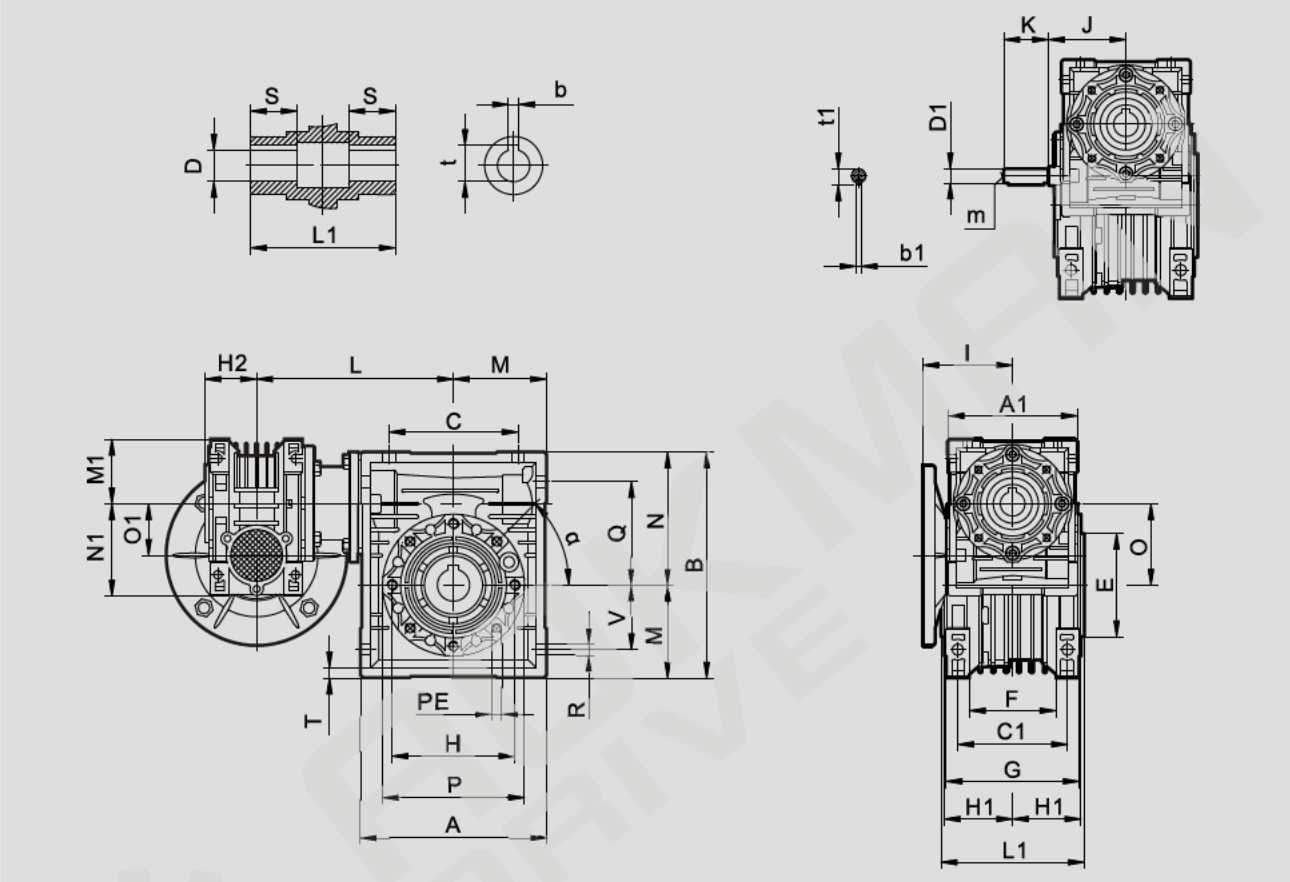

DRV	A	A1	B	C	C1	D(H7)	D1(j6)	E(h8)	F	G	H	H1	H2	I	J	K	L	L1	M	M1
025/030	80	70	97	54	44	14	-	55	32	56	65	29	22.5	45	-	-	100	63	40	35
025/040	100	70	121.5	70	60	18(19)	-	60	43	71	75	36.5	22.5	45	-	-	115	78	50	35
030/040	100	80	121.5	70	60	18(19)	9	60	43	71	75	36.5	29	55	51	20	120	78	50	40
030/050	120	80	144	80	70	25(24)	9	70	49	85	85	43.5	29	55	51	20	130	92	60	40
030/063	144	80	174	100	85	25(28)	9	80	67	103	95	53	29	55	51	20	145	112	72	40
040/075	172	100	205	120	90	28(35)	11	95	72	112	115	57	36.5	70	60	23	165	120	86	50
040/090	206	100	238	140	100	35(38)	11	110	74	130	130	67	36.5	70	60	23	182	140	103	50
050/110	255	120	295	170	115	42	14	130	-	144	165	74	43.5	80	74	30	225	155	127.5	60
063/130	293	144	335	200	120	45	19	180	-	155	215	81	53	95	90	40	245	170	146.5	72
063/150	340	144	400	240	145	50	19	180	-	185	215	96	53	95	90	40	275	200	170	72

DRV	N	N1	O	O1	P	Q	R	S	V	PE	α	b	b1	t	t1	m	Kg
025/030	57	48	30	25	75	44	6.5	21	27	M6×10(n=4)	0°	5	-	16.3	-	-	32.5
025/040	71.5	48	40	25	87	55	6.5	26	35	M6×10(n=4)	45°	6	-	20.8(21.8)	-	-	43
030/040	71.5	57	40	30	87	55	6.5	26	35	M6×10(n=4)	45°	6(6)	3	20.8(21.8)	10.2	-	43
030/050	84	57	50	30	100	64	8.5	30	40	M8×10(n=4)	45°	8(8)	3	28.3(27.3)	10.2	-	53.5
030/063	102	57	63	30	110	80	8.5	36	50	M8×14(n=8)	45°	8(8)	3	28.3(31.3)	10.2	-	53.5
040/075	119	71.5	75	40	140	93	11	40	60	M8×14(n=8)	45°	8(10)	4	31.3(38.3)	12.5	-	63.5
040/090	135	71.5	90	40	160	102	13	45	70	M10×18(n=8)	45°	10	4	38.3(41.3)	12.5	-	84.5
050/110	167.5	84	110	50	200	125	14	50	85	M10×18(n=8)	45°	12	5	45.3	16	-	84.5
063/130	187.5	102	130	63	250	140	16	60	100	M12×21(n=8)	45°	14	6	48.8	21.5	M6	85
063/150	230	102	150	63	250	180	18	72.5	120	M12×21(n=8)	45°	14	6	53.8	21.5	M6	87

NMRV连接尺寸图表 / CONNECTING DIMENSION SHEET

NMRV输出法兰尺寸图 /NMRV Output Flange Dimension

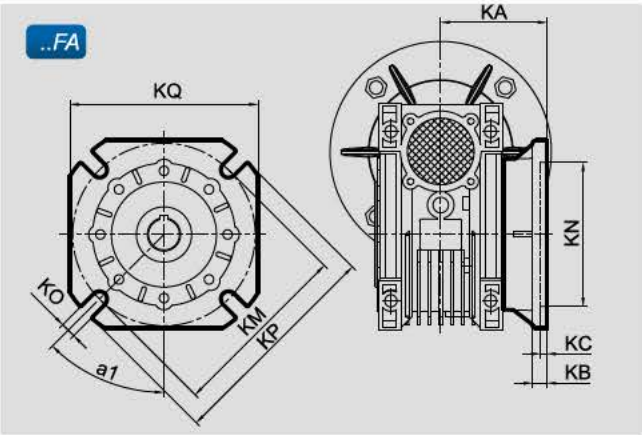

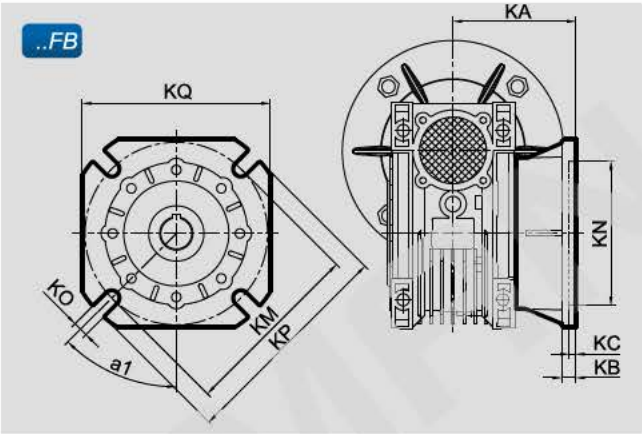

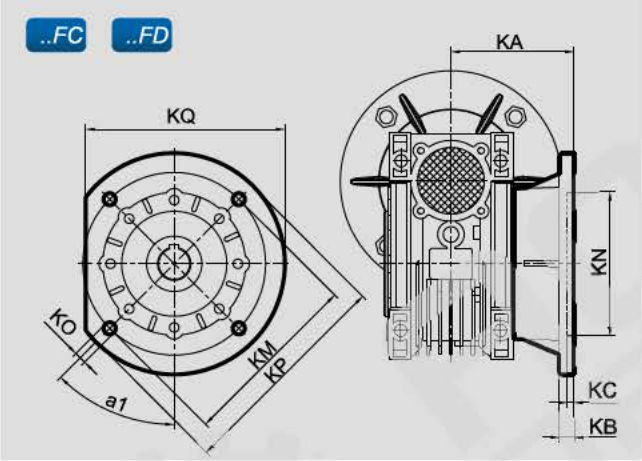

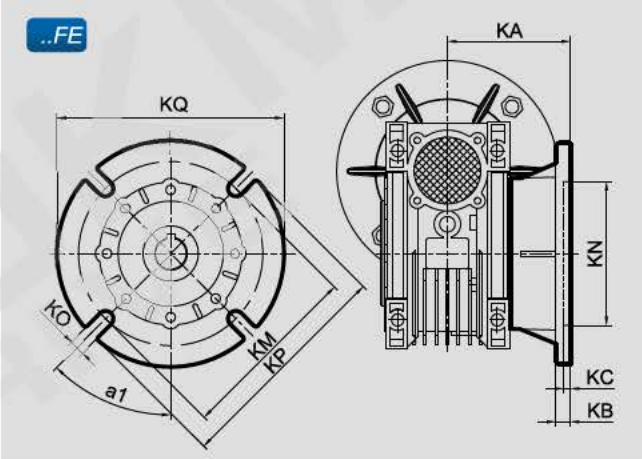

NMRV	FA								
	a1	KA	KB	KC	KM	KN_{H8}	KO	KP	KQ
030	45°	54.5	6	4	68	50	6.5(n=4)	80	70
040	45°	67	7	4	75	60	9 (n=4)	110	95
050	45°	90	9	5	85	70	11(n=4)	125	110
063	45°	82	10	6	150	115	11(n=4)	180	142
075	45°	111	13	6	165	130	14(n=4)	200	170
090	45°	111	13	6	175	152	14(n=4)	210	200
110	45°	139	15	6	230	170	14(n=8)	280	260
130	45°	140/152	15	6	255	180	16(n=8)	320	290
150	22.5°	155	15	6	255	180	16(n=8)	320	290

NMRV	FB								
	a1	KA	KB	KC	KM	KN_{H8}	KO	KP	KQ
030	-	-	-	-	-	-	-	-	-
040	45°	97	7	4	75	60	9 (n=4)	110	95
050	45°	120	9	5	85	70	11(n=4)	125	110
063	45°	112	10	6	150	115	11(n=4)	180	142
075	45°	90	13	6	130	110	11(n=4)	160	-
090	45°	122	18	6	215	180	14(n=4)	250	-
110	-	-	-	-	-	-	-	-	-
130	-	-	-	-	-	-	-	-	-
150	-	-	-	-	-	-	-	-	-

NMRV	FC								
	a1	KA	KB	KC	KM	KN_{H8}	KO	KP	KQ
040	45°	80	9	5	115	95	9.5(n=4)	140	-
050	45°	89	10	5	130	110	9.5(n=4)	160	-
063	45°	98	10	5	165	130	11(n=4)	200	-
090	45°	110	17	6	165	130	11(n=4)	200	-

NMRV	FD								
	a1	KA	KB	KC	KM	KN_{H8}	KO	KP	KQ
040	45°	58	12	5	100	80	9(n=4)	120	-
050	45°	72	14.5	5	115	95	11(n=4)	140	-
063	45°	107	10	5	165	130	11(n=4)	200	-
090	45°	151	13	6	175	152	14(n=4)	210	-

NMRV	FE								
	a1	KA	KB	KC	KM	KN_{H8}	KO	KP	KQ
040	-	-	-	-	-	-	-	-	-
050	-	-	-	-	-	-	-	-	-
063	45°	80.5	16.5	5	130	110	11(n=4)	160	-
090	-	-	-	-	-	-	-	-	-

Web: www.aokman gearbox.com Email: aokman@aokman drive.com

NMRV连接尺寸图表 / CONNECTING DIMENSION SHEET

NMRV..IEC输入法兰尺寸 / Input Flange Dimension

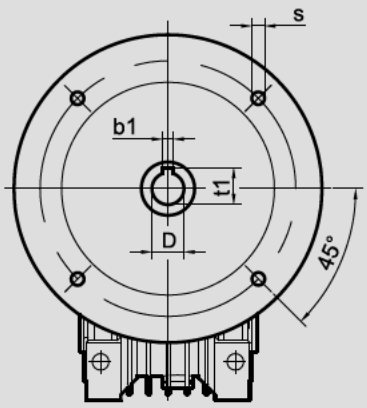

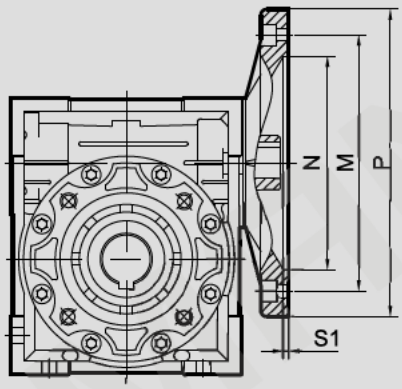

NMRV	PAM-IEC	N		M		P		S		b1	t1	s1	i(速比/ratio)											
													5	7.5	10	15	20	25	30	40	50	60	80	100
		B5	B14	B5	B14	B5	B14	B5	B14				D											
025	56B14	—	50	—	65	—	80	—	6	3	10.4	4	9	9	9	9	9	9	9	9	9	9	—	—
030	56B5/B14	80	50	100	65	120	80	6.5	5.5	3	10.4	4	9	9	9	9	9	9	9	9	9	9	9	—
	63B5/B14	95	60	115	75	140	90	9	5.5	4	12.8	4	11	11	11	11	11	11	11	11	11	—	—	—
040	56B5	80	50	100	65	120	80	6.5	5.5	3	10.4	4	—	—	—	—	—	—	—	—	9	9	9	9
	63B5/B14	95	60	115	75	140	90	9	5.5	4	12.8	4	11	11	11	11	11	11	11	11	11	11	11	11
	71B5/B14	110	70	130	85	160	105	9	7	5	16.3	5	14	14	14	14	14	14	14	14	—	—	—	—
050	63B5	95	60	115	75	140	90	9	5.5	4	12.8	5	—	—	—	—	—	—	—	11	11	11	11	11
	71B5/B14	110	70	130	85	160	105	9	7	5	16.3	5	14	14	14	14	14	14	14	14	14	14	14	
	80B5/B14	130	80	165	100	200	120	11	7	6	21.8	5	19	19	19	19	19	19	19	19	—	—	—	—
063	71B5/B14	110	70	130	85	160	105	9	7	5	16.3	5	—	—	—	—	—	—	—	14	14	14	14	14
	80B5/B14	130	80	165	100	200	120	11	7	6	21.8	5	—	19	19	19	19	19	19	19	19	19	19	19
	90B5/B14	130	95	165	115	200	140	11	9	8	27.3	5	—	24	24	24	24	24	24	—	—	—	—	—
075	71B5	110	—	130	—	160	—	9	7	5	16.3	5	—	—	—	—	—	—	—	—	14	14	14	14
	80B5/B14	130	80	165	100	200	120	11	7	6	21.8	5	—	—	—	—	—	—	19	19	19	19	19	19
	90B5/B14	130	95	165	115	200	140	11	9	8	27.3	5	—	24	24	24	24	24	24	24	—	—	—	—
	100B5/B14	180	110	215	130	250	160	13	9	8	31.3	5.5	—	28	28	28	—	—	—	—	—	—	—	—
	112B5/B14	180	110	215	130	250	160	13	9	8	31.3	5.5	—	28	—	—	—	—	—	—	—	—	—	—
090	80B5/B14	130	80	165	100	200	120	11	7	6	21.8	5	—	—	—	—	—	—	—		19	19	19	19
	90B5/B14	130	95	165	115	200	140	11	9	8	27.3	5	—	—	—	—	—	24	24	24	24	24	—	—
	100B5/B14	180	110	215	130	250	160	13	9	8	31.3	5.5	—	28	28	28	28	28	28	—	—	—	—	—
	112B5/B14	180	110	215	130	250	160	13	9	8	31.3	5.5	—	28	28	28	28	—	—	—	—	—	—	—
110	80B5	130	—	165	—	200	—	11	7	6	21.8	6	—	—	—	—	—	—	—	—	—	—	19	19
	90B5	130	—	165	—	200	—	11	9	8	27.3	6	—	—	—	—	—	—	24	24	24	24	24	24
	100B5	180	—	215	—	250	—	13	9	8	27.3	6	—	28	28	28	28	28	28	28	28	28	—	—
	112B5	180	—	215	—	250	—	13	9	8	31.3	6	—	28	28	28	28	28	28	—	—	—	—	—
	132B5	230	—	265	—	300	—	13	—	10	41.3	6	—	38	38	38	38	—	—	—	—	—	—	—
130	90B5	130	—	165	—	200	—	11	9	8	27.3	6	—	—	—	—	—	—	—	—	—	—	24	24
	100B5	180	—	215	—	250	—	13	9	8	31.3	6	—	—	—	—	—	—	—	28	28	28	28	28
	112B5	180	—	215	—	250	—	13	9	8	31.3	6	—	28	28	28	28	28	28	28	28	28	—	—
	132B5	230	—	265	—	300	—	13	—	10	41.3	6	—	38	38	38	38	38	38	38	—	—	—	—
150	100/112B5	180	—	215	—	250	—	13	9	8	31.3	6	—	—	—	—	—	—	—	—	28	28	28	28
	132B5	230	—	265	—	300	—	13	—	10	41.3	6	—	—	—	—	38	38	38	38	38	38	—	—
	160B5	250	—	300	—	350	—	19	—	12	45.3	6	—	42	42	42	42	42	—	—	—	—	—	—

NMRV连接尺寸图表 / CONNECTING DIMENSION SHEET

NMRV..NEMA输入法兰尺寸 / Input Flange Dimension

48C~145TC

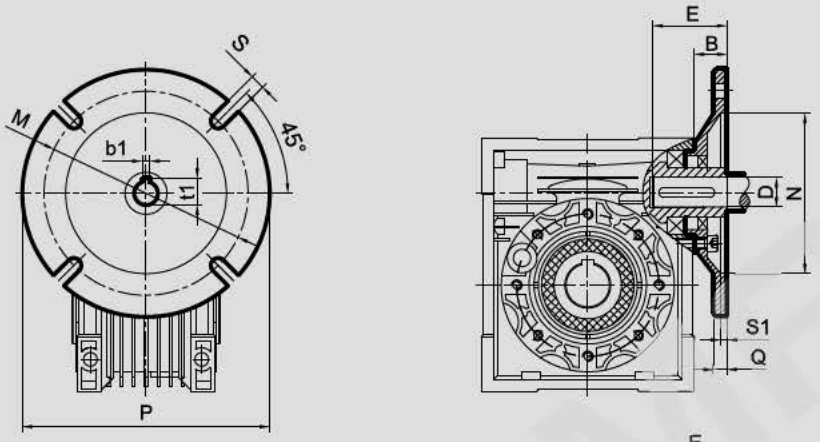

182TC~215TC

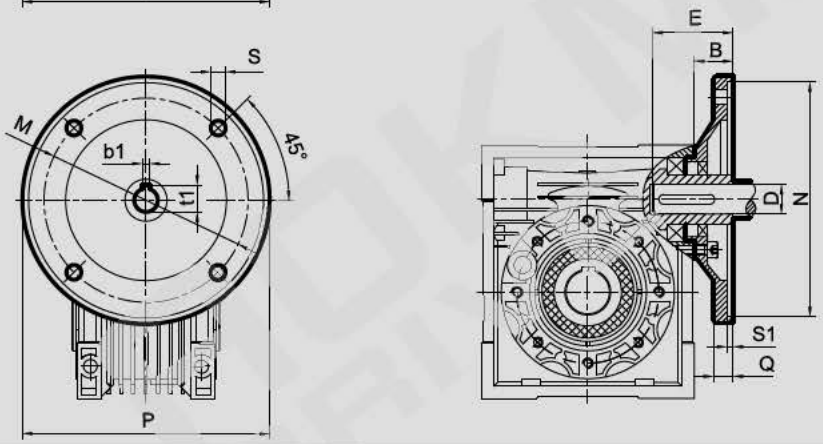

NMRV	NEMA Flange	B	D	E	b1	t1	M	N	P	Q	S	S1
030	48C	1.03	0.500	1.66	0.130	0.560	3.750	3.0	5.7	0.433	0.320	0.177
040	56C	1.15	0.625	2.06	0.188	0.713	5.875	4.5	6.5	0.433	0.413	0.177
050	56C	1.15	0.625	2.06	0.188	0.713	5.875	4.5	6.5	0.433	0.413	0.177
063	56C	1.22	0.625	2.06	0.188	0.713	5.875	4.5	6.5	0.433	0.413	0.177
	143TC	1.22	0.875	2.12	0.188	0.963	5.875	4.5	6.5	0.433	0.413	0.177
	145TC											
075 090	56C	1.50	0.625	2.06	0.188	0.713	5.875	4.5	6.5	0.433	0.413	0.177
	143TC	1.50	0.875	2.12	0.188	0.963	5.875	4.5	6.5	0.433	0.413	0.177
	145TC											
	182TC	1.50	1.125	2.62	0.250	1.240	7.250	8.5	9.0	0.472	0.551	0.197
	184TC											
110 130	56C	1.89	0.625	2.06	0.188	0.713	5.875	4.5	6.5	0.433	0.413	0.177
	143TC	1.89	0.875	2.12	0.188	0.963	5.875	4.5	6.5	0.433	0.413	0.177
	145TC											
	182TC	1.89	1.125	2.62	0.250	1.240	7.250	8.5	9.0	0.472	0.551	0.197
	184TC											
	213TC	1.89	1.375	3.12	0.312	1.517	7.250	8.5	9.0	0.472	0.551	0.197
	215TC											
150	182TC	1.33	1.125	2.62	0.250	1.240	7.250	8.5	9.0	0.472	0.551	0.197
	184TC											
	213TC	1.33	1.375	3.12	0.312	1.517	7.250	8.5	9.0	0.472	0.551	0.197
	215TC											

Web: www.aokman gearbox.com Email: aokman@aokman drive.com

NMRV连接尺寸图表 / CONNECTING DIMENSION SHEET

NMRV..ST伺服电机输入法兰尺寸 / Servo Motor Input Flange Dimension

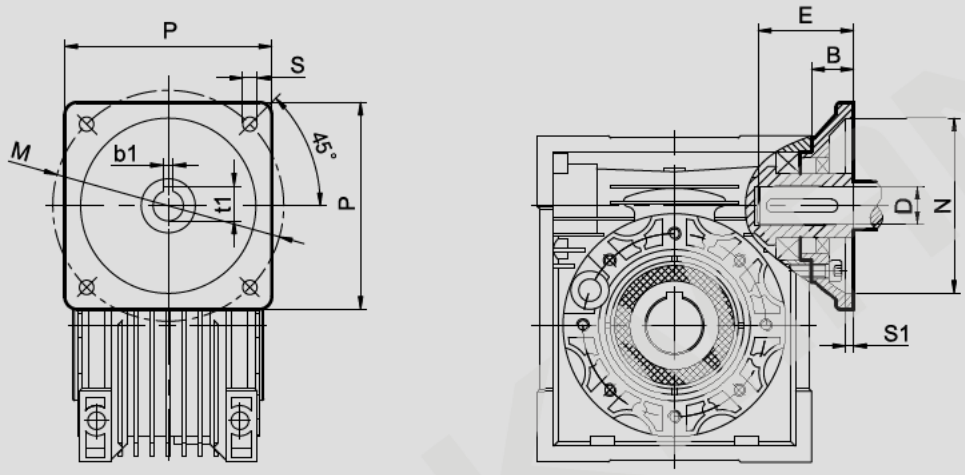

NMRV	P	B	D_{h7}	E	b1	t1	M	N	S	S1
040	60	35	14	30	5	16.3	70	50	5.5	4
050	60	35	14	30	5	16.3	70	50	5.5	4
	80	28	19	35	6	21.8	90	70	6	5
	90	30	16	35	5	18.3	100	80	6.5	5
	110	26	19	55	6	21.8	130	95	9	6
	130	32	22	57	6	24.8	145	110	9	6
063	60	40	14	30	5	16.3	70	50	5.5	4
	80	21	19	35	6	21.8	90	70	6	5
	90	21	16	35	5	18.3	100	80	6.5	5
	110	46	19	55	6	21.8	130	95	9	6
	130	40	22	57	6	24.8	145	110	9	6
075	110	47	19	55	6	21.8	130	95	9	6
	130	40	22	57	6	24.8	145	110	9	6
	150	38	28	58	8	31.3	165	130	11	6
090	110	47	19	55	6	21.8	130	95	9	6
	130	40	22	57	6	24.8	145	110	9	6
	150	38	28	58	8	31.3	165	130	11	6
110	130	38	22	57	6	24.8	145	110	9	6
	150	38	28	58	8	31.3	165	130	11	6
	180	38	35	65	10	38.3	200	114.3	13.5	6
130	130	38	22	57	6	24.8	145	110	9	6
	150	38	28	58	8	31.3	165	130	11	6
	180	38	35	65	10	38.3	200	114.3	13.5	6
150	130	38	22	57	6	24.8	145	110	9	6
	150	38	28	58	8	31.3	165	130	11	6
	180	38	35	65	10	38.3	200	114.3	13.5	6

附件尺寸图表 / ACCESSORIES OUTLINE DIMENSION SHEET

输出轴 / Output Shafts

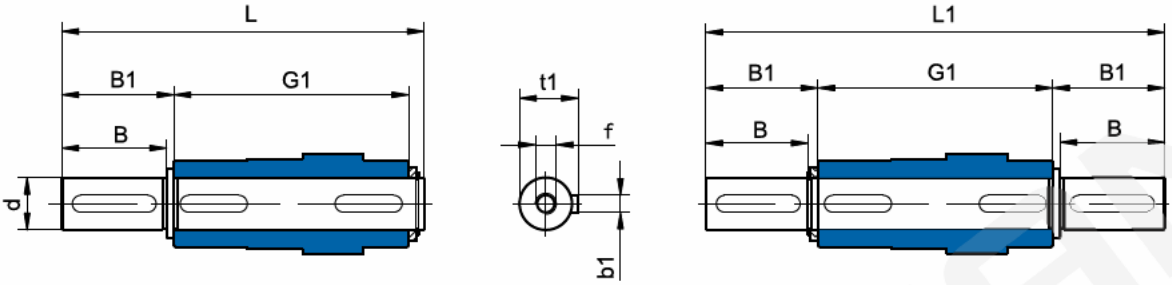

SS

DS

NMRV	dh6	B	B1	G1	L	L1	f	b1	t1
025	11	23	25.5	50	81	101	-	4	12.5
030	14	30	32.5	63	102	128	M6*17	5	16
040	18	40	43	78	128	164	M6*17	6	20.5
050	25	50	53.5	92	153	199	M10*27	8	28
063	25	50	53.5	112	173	219	M10*27	8	28
075	28	60	63.5	120	192	247	M10*27	8	31
090	35	80	84.5	140	234	309	M12*34	10	38
110	42	80	84.5	155	249	324	M16*42	12	45
130	45	80	85	170	265	340	M16*42	14	48.5
150	50	82	87	200	297	374	M16*42	14	53.5

蜗杆尾出轴（E）/ Extension worm shaft(E)

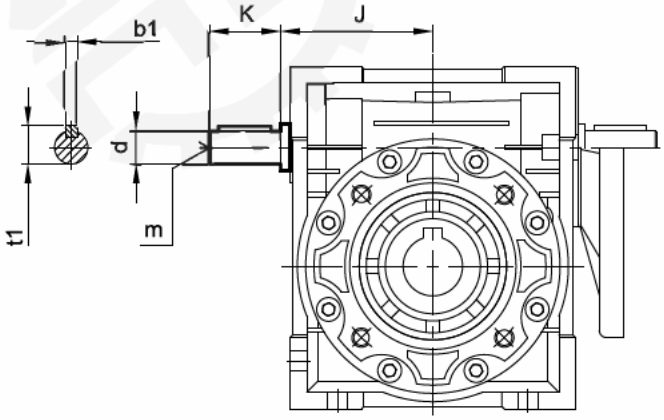

NMRV	J	d(j6)	K	m	b1	t1
025	37	9	20	-	3	10.2
030	45	9	20	-	3	10.2
040	53	11	23	-	4	12.5
050	64	14	30	M6	5	16
063	75	19	40	M6	6	21.5
075	90	24	50	M8	8	27
090	108	24	50	M8	8	27
110	135	28	60	M10	8	31
130	155	30	80	M10	8	33
150	175	35	80	M12	10	38

Web: www.aokman gearbox.com Email: aokman@aokman drive.com

附件尺寸图表 / ACCESSORIES OUTLINE DIMENSION SHEET

扭力臂 / Torque Arm

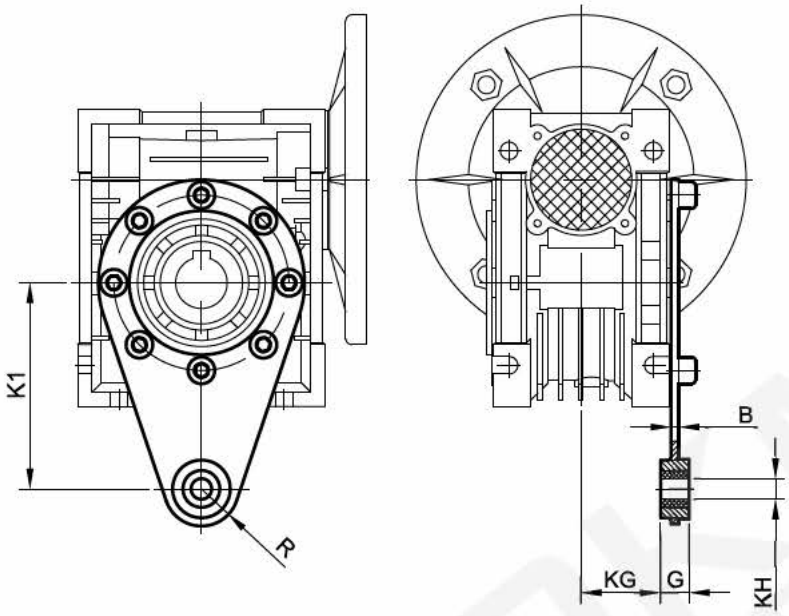

NMRV	K1	G	KG	KH	R	B
025	70	14	17.5	8	15	4
030	85	14	24	8	15	4
040	100	14	31.5	10	18	4
050	100	14	38.5	10	18	4
063	150	14	49	10	18	6
075	200	25	47.5	20	30	6
090	200	25	57.5	20	30	6
110	250	30	62	25	35	6
130	250	30	69	25	35	6
150	250	30	84	25	35	8

防尘盖 / Cover

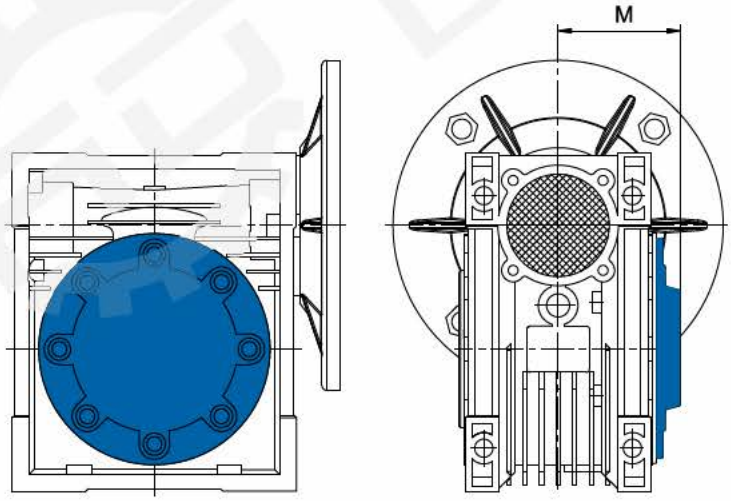

NMRV	M
030	42
040	50
050	58
063	69
075	74
090	85
110	94
130	102
150	117

安装方位图 / INSTALLATION POSITIONS DIAGRAM

输出法兰位置 / Position diagram for output flange

FA1,FB1,FC1,FD1,FE1	FA2,FB2,FC2,FD2,FE2
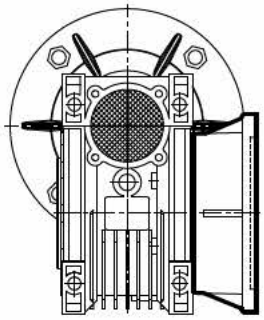	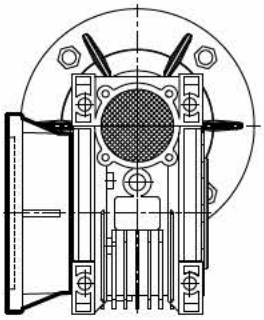

如果没有特殊要求，一般按出厂标准位置如图F..1方式和B3位置提供。

Unless specified otherwise, the gear units is supplied with the flange in pos. **F..1** referred to position **B3**.

单向输出轴位置 / Position diagram for single output shaft

SS1	SS2
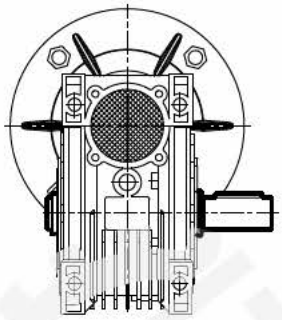	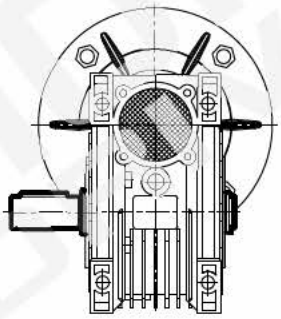

如果没有特殊要求，一般按出厂标准位置如图SS1方式和B3位置提供。

Unless specified otherwise, the gear units is supplied with the flange in pos. **SS1** referred to position **B3**.

扭力臂（A）位置 / Torque arm (A) position

A1	A2
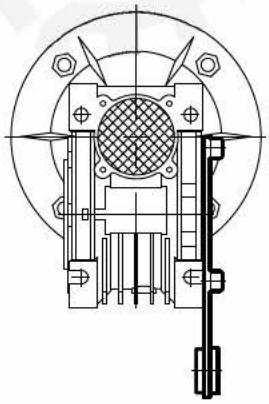	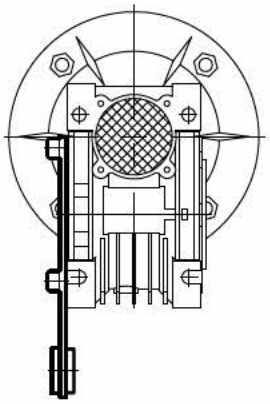

如果没有特殊要求，一般按出厂标准位置如图A1方式和B3位置提供。

Unless specified otherwise, the gear units is supplied with the flange in pos. **A1** referred to position **B3**.

Web: www.aokman gearbox.com Email: aokman@aokman drive.com

安装方位图 / INSTALLATION POSITIONS DIAGRAM

符号释意 / Symbols Meaning

符号/Symbol	含义/Meaning
	排气阀 Breather valve
	油位塞 Oil level plug
	放油塞 Oil drain plug

电机接线盒方位/Position of motor terminal box

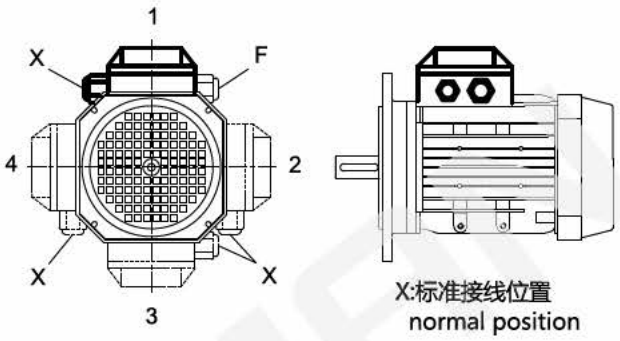

NMRV..安装方位 / Mounting Positions

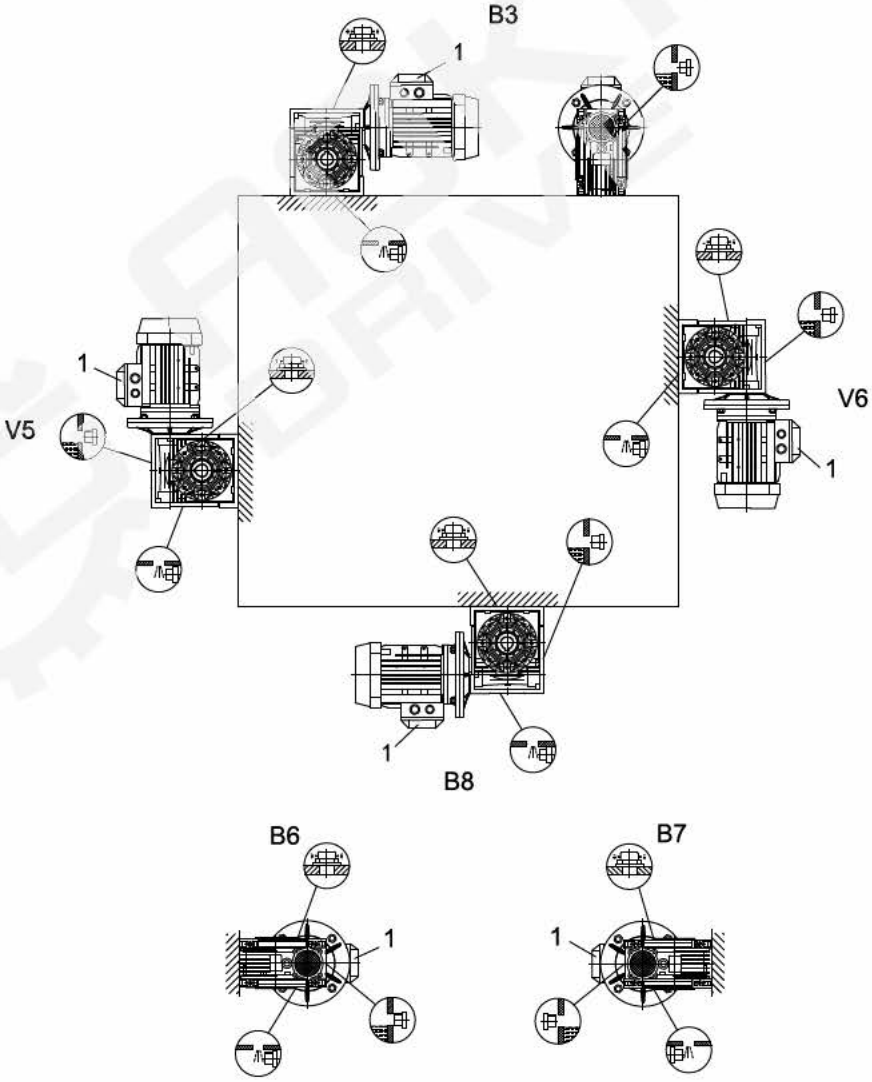

安装方位图 / INSTALLATION POSITIONS DIAGRAM

DRV..安装方位 / Mounting Positions

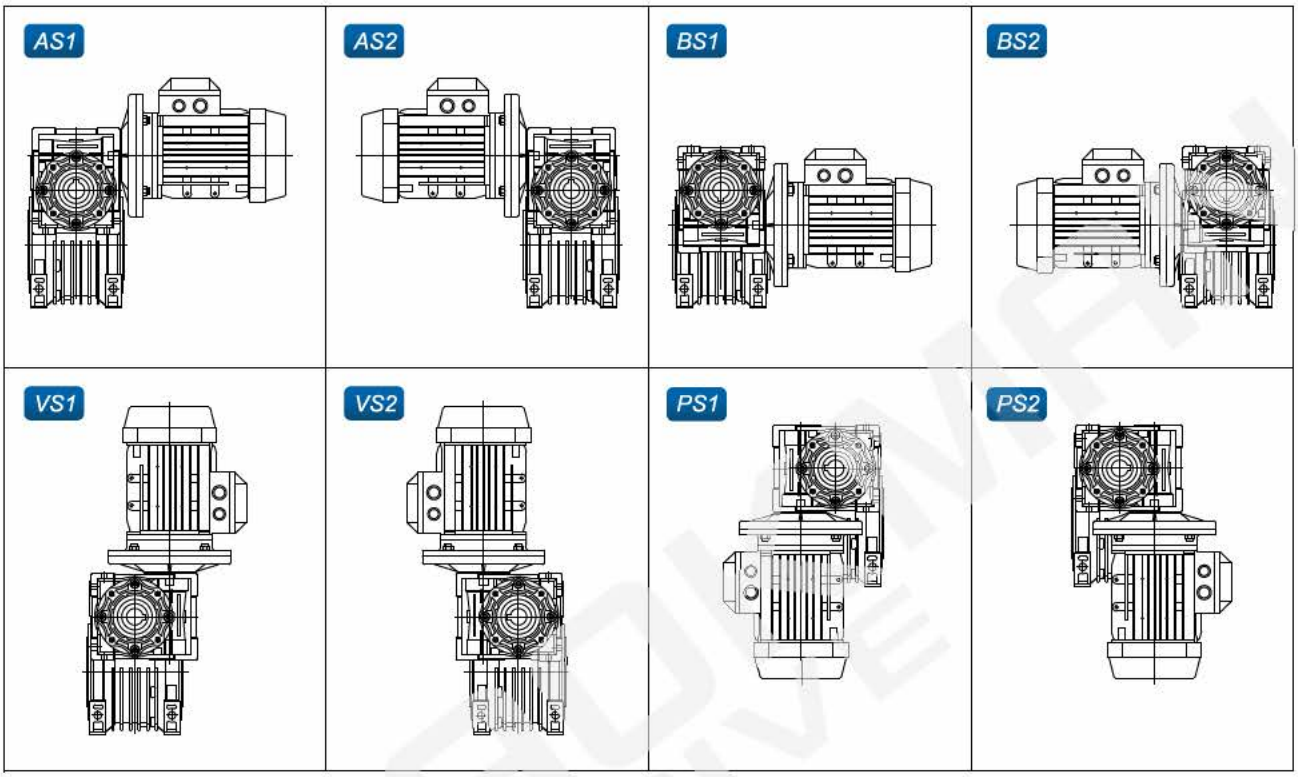

如果没有特殊要求，一般按出厂标准位置如图AS2组合方式和B3位置提供。
Unless specified otherwise, the gear units is supplied with the flange in pos. AS2 referred to position B3.

旋转方向/Direction of rotation

NMRV、NRV

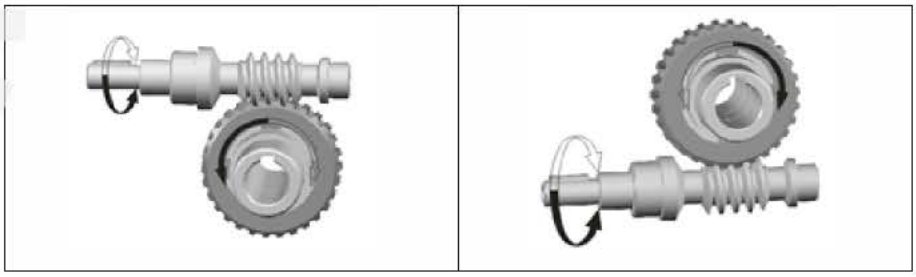

DRV

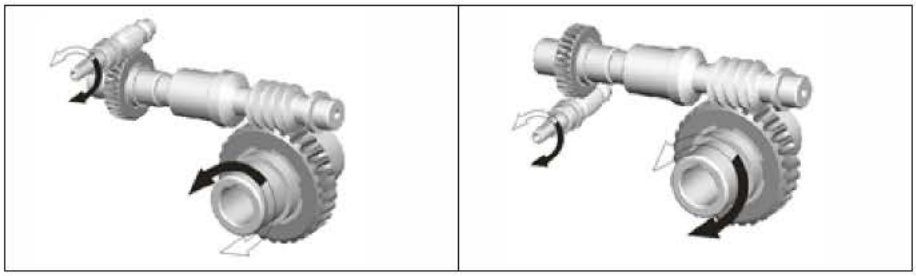

Web: www.aokman gearbox.com Email: aokman@aokman drive.com

机械无级变速机

UD SERIES SPEED VARIATOR

产品型式 / TYPE

UDL(B3)

UDL(B5)

UDT(B3)

UDT(B5)

结构分解图 / STRUCTURE DIAGRAM

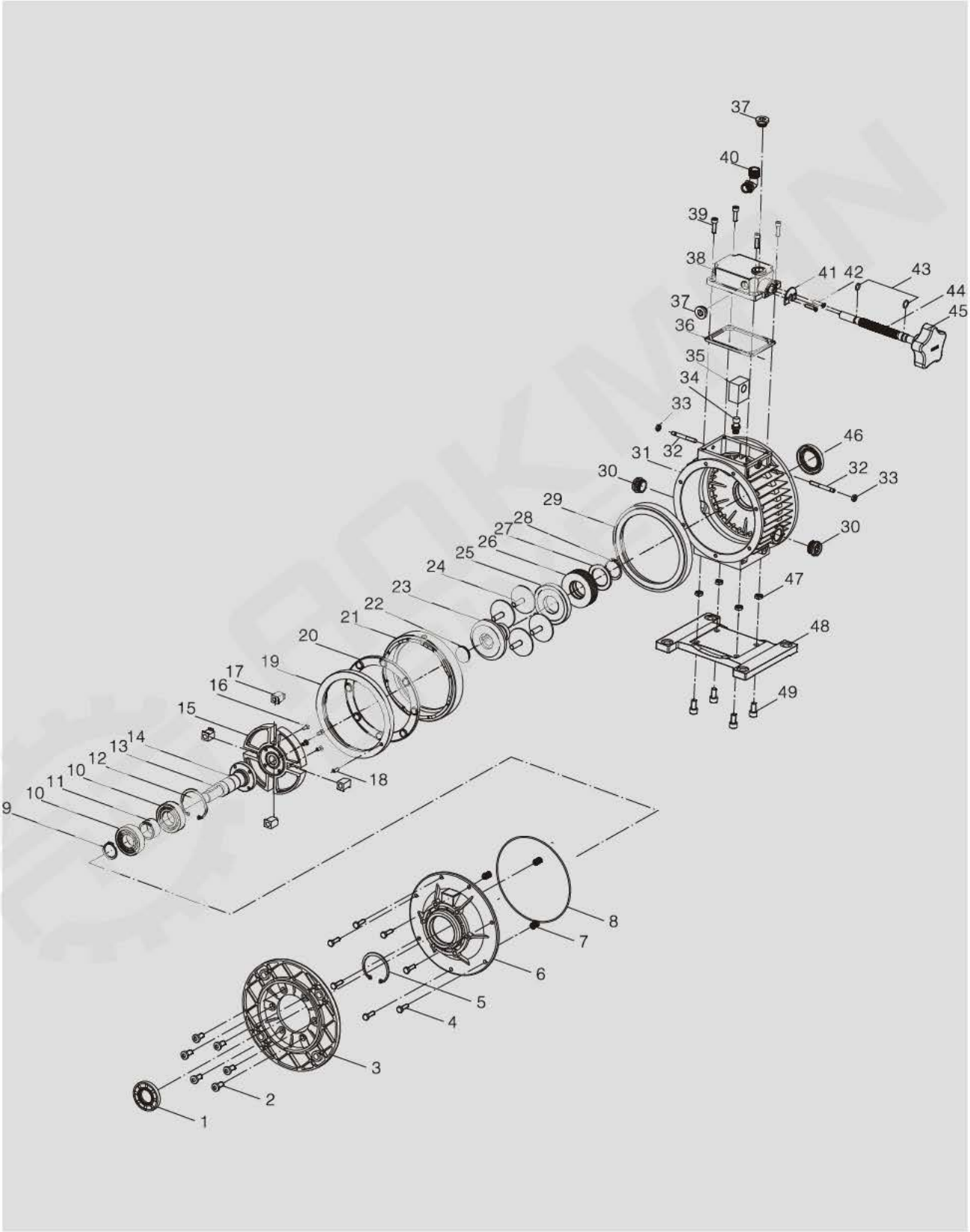

结构分解图 / STRUCTURE DIAGRAM

1	油封 / Oil seal	26	蝶形弹簧 / Will spring
2	内六角圆柱头螺栓 / Hexagonal cylindrical head bolts	27	挡圈 / Block circle
3	输出法兰 / Output flanges	28	轴用挡圈 / Shaft block
4	外六角圆柱头螺栓 / Hexagonal cylindrical head bolts	29	定环 / Set ring
5	孔用挡圈 / Hole block circle in	30	视油镜 / Depending on oil mirror
6	输出端盖 / Output cover	31	箱体 / Cabinet
7	弹簧 / Spring	32	螺栓 / Bolt
8	O型橡胶密封圈 / O-ring	33	螺母 / Nnt
9	轴用挡圈 / Shaft block	34	球头调速柄 / Ball head speed control handle
10	轴承 / Bearing	35	调速螺母 / Speed nuts
11	轴承隔套 / Bearing erery set of	36	橡胶垫片 / Rubber gaskets
12	孔用挡圈 / Hole block circle in	37	油塞 / Oil plug
13	平键 / Parallel key	38	操作盖 / Operating cover
14	输出轴 / Output shaft	39	内六角圆柱头螺栓 / Inside hexagonal cylindrical head bolts
15	转臂 / Turn arm	40	弯管 / Bent pipe
16	螺钉 / Screws	41	挡板 / Baffle
17	滑块 / Slider	42	螺钉 / Screws
18	弹性圆柱销 / Elastic cylindrical pin	43	O型橡胶密封圈 / O-ring
19	固定凸轮 / Fixed CAM	44	丝杆 / Screw
20	滚珠环 / Ball ring	45	调速柄 / Speed control handle
21	调速凸轮 / Speed CAM	46	油封 / Oil seal
22	平面油封 / Plane oil seal	47	螺母 / Nut
23	主动轮 / Active wheel	48	底脚 / Foot bottom
24	行星锥盘 / Planet cone-disk	49	内六角圆柱头螺栓 / Inside hexagonal cylindrical head bolts
25	压盘 / Pressure plate		

Web: www.aokman gearbox.com Email: aokman@aokman drive.com

产品概述 / SUMMARIZE

结构特点 / STRUCTURE FEATURES

1. 调速精度高，速度重复精度达0.5-1转。
2. 可双向连续运转。
3. 输出传动比在1：1.4至1：7之间（UDL002除外）连续可调，变速比达5。
4. 运行效率高，平稳静噪。
5. 密封性好，对使用环境适应性强。
6. 能与各种减速机灵活组合，解决各种传动变速方案。

1. High precision for the speed adjustment, the iterative precision of the speed is between 0.5-1cycle.
2. Can run bi-directional continuously.
3. The output transmission ratio is between 1:1.4and 1:7(except UDL002) and is adjustable.
4. High operating dfficiency,stable and no noise.
5. Good sealing, and good adaptability in the operating environment.
6. Can combine with all kinds of reducers agilely to handle various kinds of transmission projects.

主要材料 / MAIN MATERIALS

1. 外壳：UDL为铝合金，UDT为铸铁；
2. 内部零件：为热处理淬硬的GCr15钢；
3. 轴：热处理淬硬并经低温回火的20Cr钢。

1. Outside shell:Aluminum alloy for UDL and casting iron for UDT.
2. Inner parts: Gcr15 steel heat hardening.
3. Shaft: 20Cr with heat treatment and tempered with low temperature.

涂漆 / PAINTING

RAL7035	浅灰色 / grey
RAL5010	蓝色 / blue

配套电机 / MATCHED MOTORS

铝壳电机，IP54/55，B5安装法兰。

Aluminum Housing Motor, IP54/55, B5 Flange Mounting.

型号说明 / MODEL ILLUMINATE

无级变速机 / Stepless speed variator　　电机 / Motors

UD	L	010	/	B3	/	0.75-4P	/	BMG	/	1	/	X
①	②	③		④		⑤		⑥		⑦		⑧

NO	说明	Comments
1	无级变速机代号	Code of stepless speed variator
2	L：铝合金机壳 T：铸铁机壳	L:Aluminium alloy casing T:cast iron casing
3	无级变速机机座号	Steat NO. of stepless speed variato
4	B3：底脚安装机型 B5：法兰安装机型	B3:Foot-mounted model B5:Flange-mounted positon
5	1.无代号表示不带电机 2.0.75-4P: 电机功率、极数 3.80ST-M01330:伺服电机型号	1. No mark means without motor 1.0.75-4P: Motor Power, Poles 2.80ST-M01330: Servo motor type
6	1.无代号表示不带制动器 2.BMG:制动器	1.No mark means without brake 2.BMG:brake
7	电机接线盒位置，默认位置1可以不写	Position of motor terminal box default position 1 not to show is ok
8	电机进线位置，默认位置X 可以不写	Coil position for motor , default position X not to show is ok

订单时请说明是否带电机，一般按不带电机供应。
When ordering, you should show whether the reducers are equipped with motors, otherwise reducers are supplied without motors.

示例 / Example: **UDL005/B5/0.37-4P**

Web: www.aokman gearbox.com　Email: aokman@aokman drive.com

型号说明 / MODEL ILLUMINATE

结构 STRUSTURE

1.输出轴	Output shaft
2.转臂	Turn arm
3.滑块	Slider
4.固定凸轮	Fixed CAM
5.滚珠环	Ball ring
6.调速凸轮	Speed CAM
7.操作盖	Oprating cover
8.定环	Sfet ring
9.箱体	Cabinet
10.压盘	Pressure plate
11.碟形弹簧	Will spring
12.挡圈	Block circle
13.主动轮	Active wheel
14.行星锥盘	Planet cone-disk

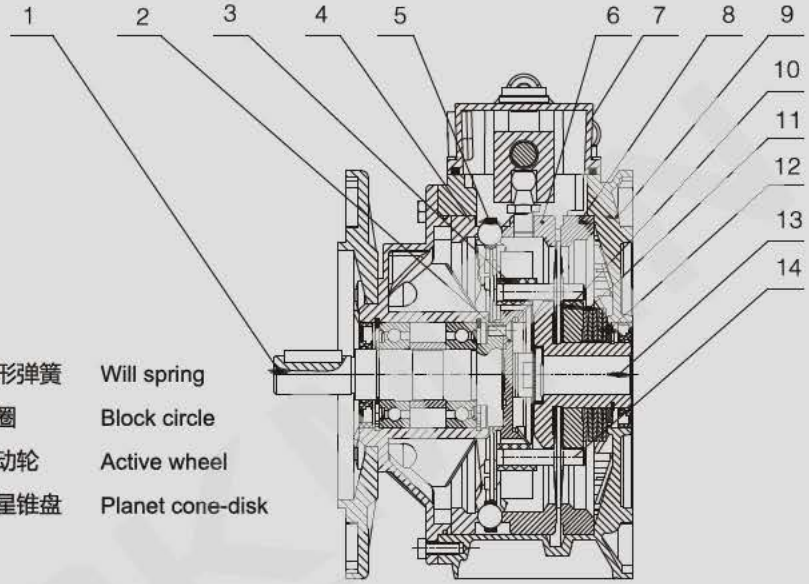

变速机的效率 / Efficiency

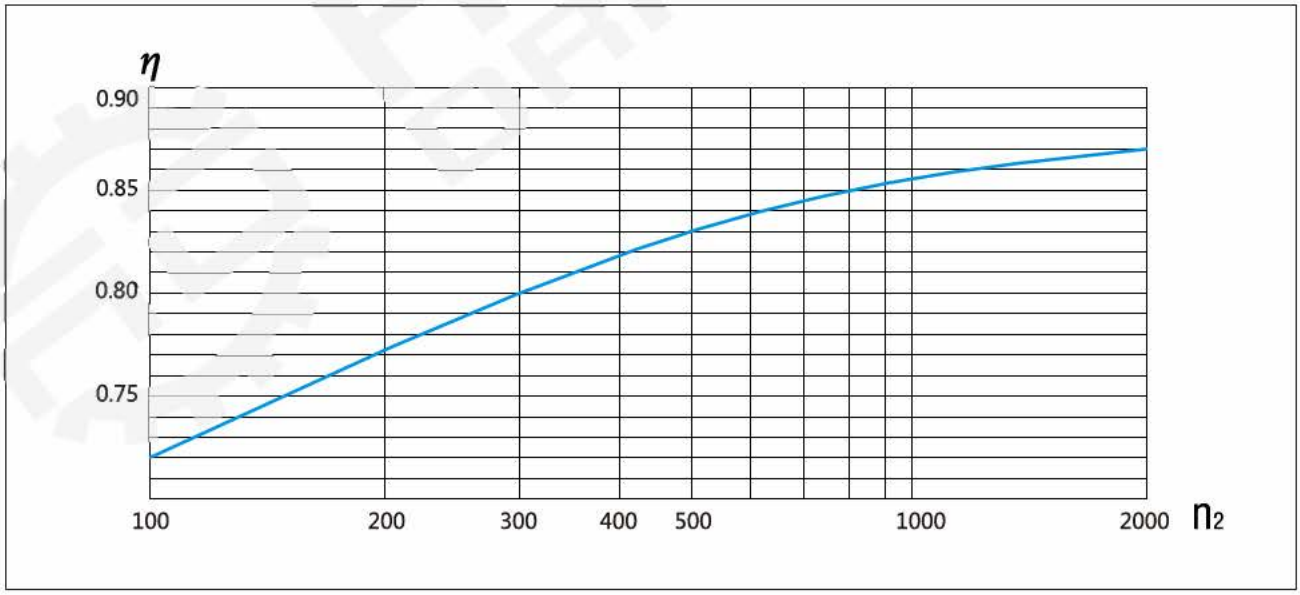

注：每型变速机的效率曲线并不尽相同，但大致趋势规律是相同的。

Note :The efficiency curve for different variator is not the same.But its trend rules are same.

UD外形尺寸图表 / OUTLINE DIMENSION SHEET

变速机的电机配合接口 / Adaptation Interface

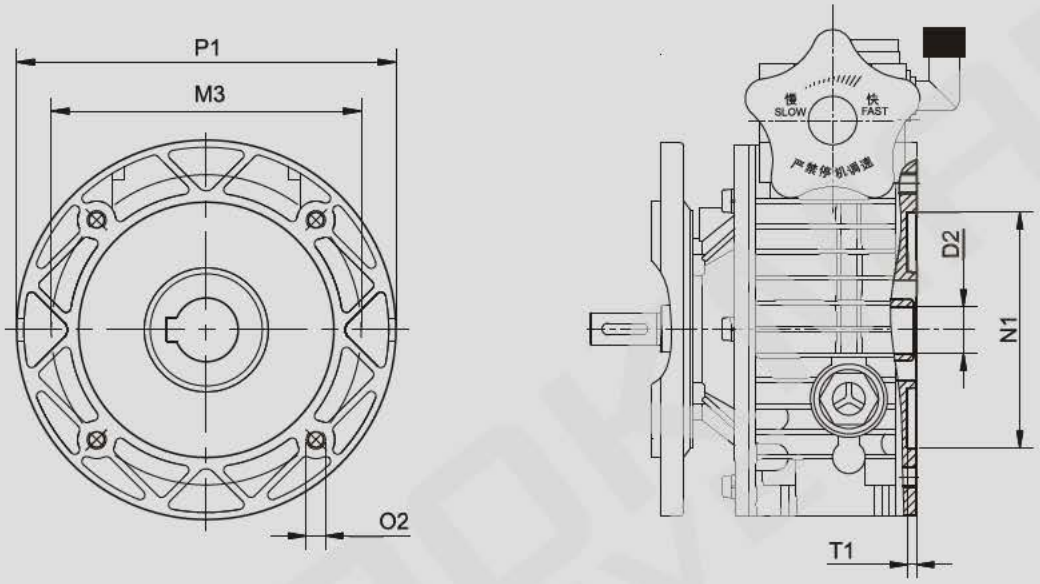

TYPE	PAM-IEC	P1	N1 (H8)	M3	O2	D2 (F7)	T1
UDL002	63B5	140	95	115	M8	11	5
UDL005	71B5	160	110	130	M8	14	5
UDL010	80B5	200	130	165	M10	19	6
	90B5	200	130	165	M10	24	6
UDT020	90B5	200	130	165	M10	24	6
UDT030	100/112B5	250	180	215	M12	28	6
UDT050	132B5	300	230	265	M12	28	6

Web: www.aokman gearbox.com Email: aokman@aokman drive.com

UD外形尺寸图表 / OUTLINE DIMENSION SHEET

B3型外形尺寸 / B3 Size

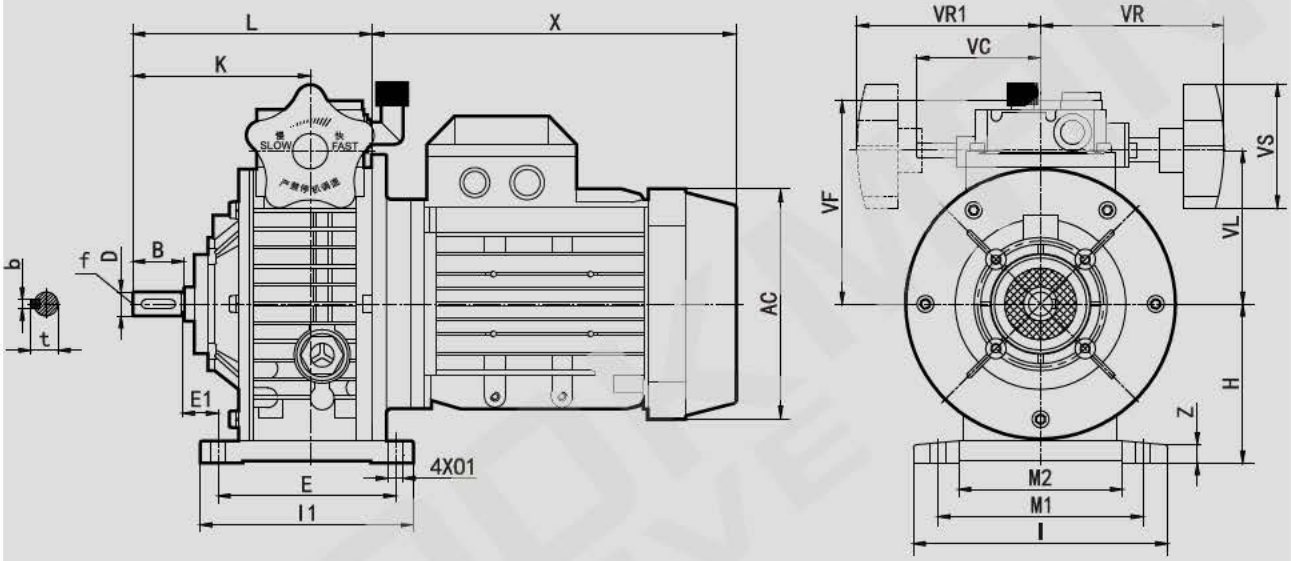

B3型机座安装形式 / B3 type frame installation form

TYPE	B	D(j6)	E	E1	H	I	I1	K	L	M1	M2	01	VC	VF	VL	VR	VR1	VS	b	t	z
UDL002	23	11	105	17.5	80	145	120	87.5	135.5	110	71	9	71	111	78	110	110	85	4	12.5	10
UDL005	30	14	104	20	93	149	125	104	140	120	96	9	71	123	90	110	110	85	5	16	10
UDL010	40	19	125	26	113	190	150	125.5	179	160	135	11	79	140	107	120	120	110	6	21.5	15
UDT020	50	24	140	49	123	241	150	165	238	180	143	12	-	144	122	150	-	110	8	27	18
UDT030	60	28	230	25	150	300	270	191	268	245	190	14	-	188	150	160	-	110	8	31	25
UDT050	70	38	250	33	200	365	290	201	319	315	245	18	-	-	192	194	-	110	10	41	30

注：1. X、AC尺寸参见本公司样本《通用电机》篇中的尺寸部分。
NOTE 1 Please refer to our catalogue Electric Motor for the size of X&AC.

UD外形尺寸图表 / OUTLINE DIMENSION SHEET

B5型外形尺寸 / B5 Size

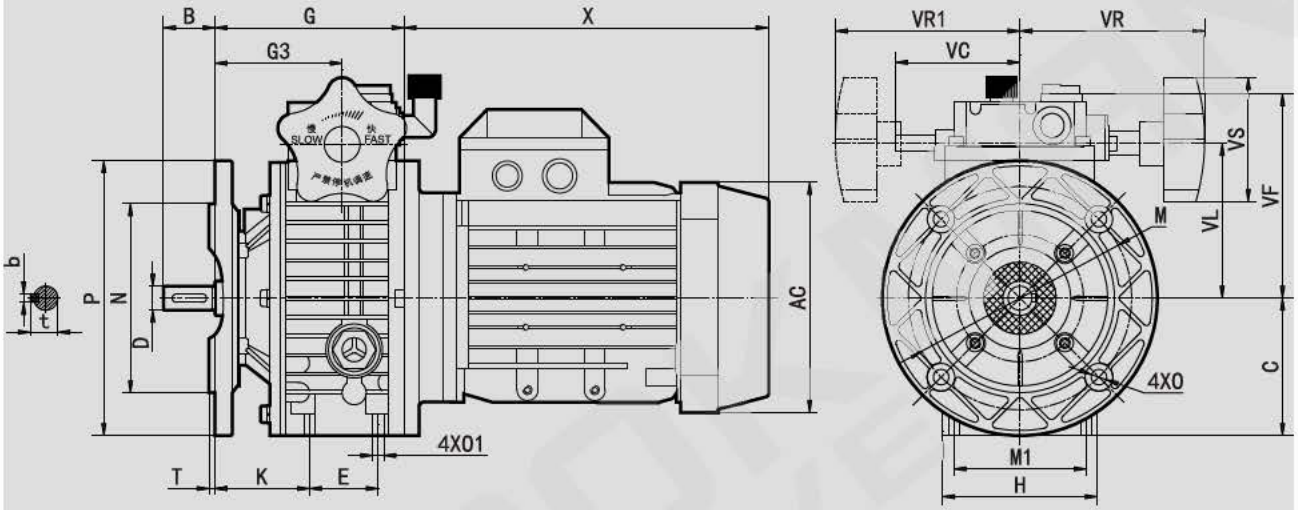

B5型机座安装形式 / B5 TYPE FRAME INSTALLATION FORM

TYPE	B	C	D(j6)	E	G	G3	H	M	M1	O	O1	P	T	K	VC	VF	VL	VR	VR1	b	t
UDL002	23	70	11	50	112.5	64.5	72	115	60	9	M6	140	3.5	46	71	111	78	110	110	4	12.5
UDL005	30	80	14	40	110	74	90	130	77	9	M8	160	3.5	53	71	123	90	110	110	5	16
UDL010	40	100	19	58	139	85.5	98	165	84	11	M8	200	3.5	60	79	140	107	120	120	6	21.5
UDT020	50	109	24	-	188	115	241	165	-	11	-	200	3.5	-	-	144	122	150	-	8	27
UDT030	60	130	28	-	208	131	270	215	-	15	-	250	4	-	-	188	150	160	-	8	31
UDT050	70	200	38	-	244	131	-	265	-	19	-	300	4	-	-	-	192	194	-	10	41

注：1. X、AC尺寸参见本公司样本《通用电机》篇中的尺寸部分。
NOTE 1 Please refer to our catalogue Electric Motor for the size of X&AC.

Web: www.aokman gearbox.com Email: aokman@aokman drive.com

安装方位图 / INSTALLATION POSITIONS DIAGRAM

UD系列无级变速机性能参数
Performance table for UD series speed variator (n1=1400r/min)

电机功率 / MOTOR POWER	型号/model	I	n2 (r/min)	M2 (Nm)
0.18kW	UDL002	1.6-8.2	880-170	1.5-3
0.25kW	UDL005	1.4-7	1000-200	2.2-6
0.37kW	UDL005	1.4-7	1000-200	3-6
0.55kW	UDL010	1.4-7	1000-200	4-8
0.75kW	UDL010	1.4-7	1000-200	6-12
1.1kW	UDT020	1.4-7	1000-200	9-18
1.5kW	UDT020	1.4-7	1000-200	12-24
2.2kW	UDT030	1.4-7	1000-200	18-36
3.0kW	UDT030	1.4-7	1000-200	24-48
4.0kW	UDT030	1.4-7	1000-200	32-64
5.5kW	UDT050	1.4-7	1000-200	45-90
7.5kW	UDT050	1.4-7	1000-200	59-118

UD与NMRV安装方位 / UD AND NMRV INSTALLATION POSITION

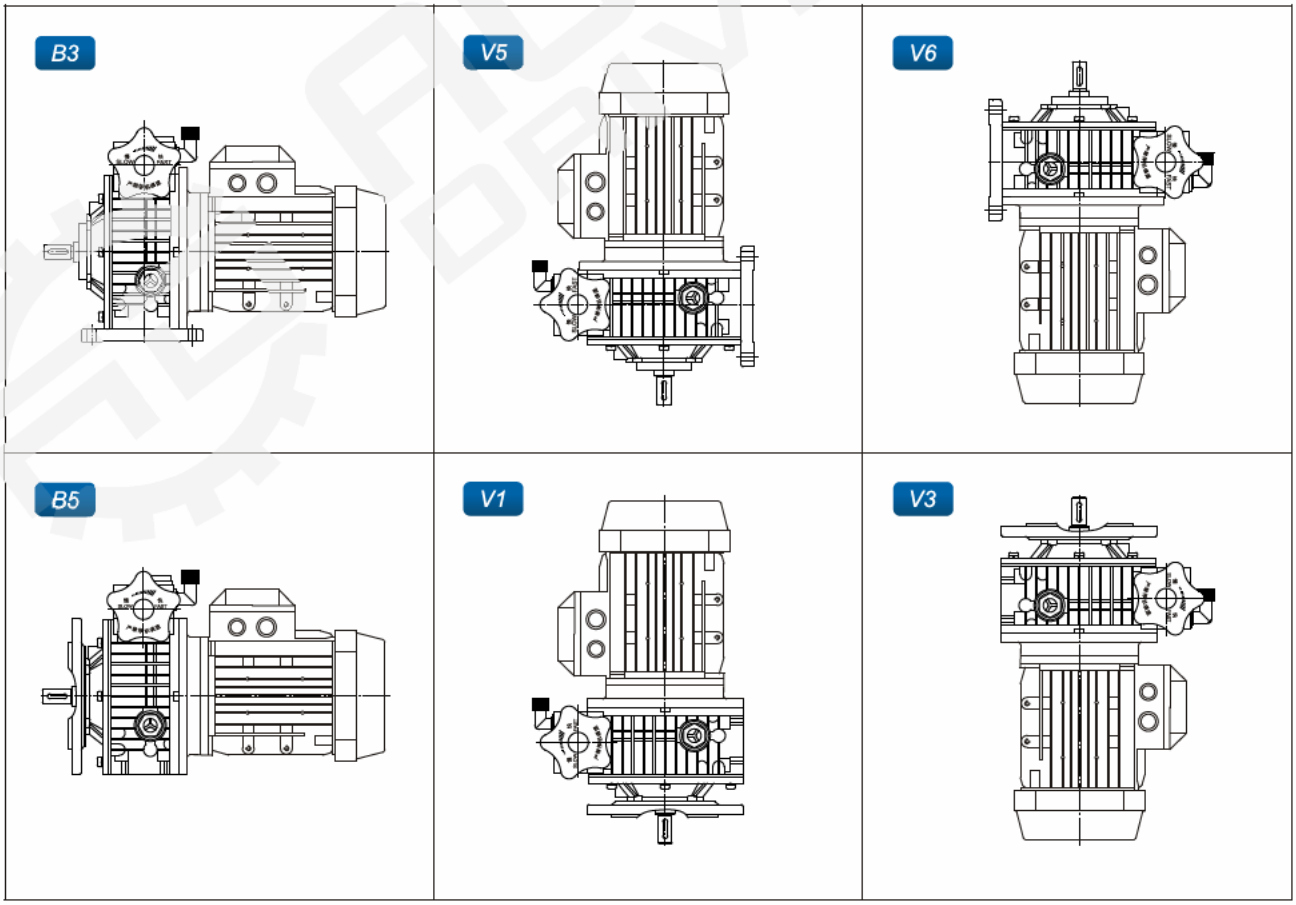

安装方位图 / INSTALLATION POSITIONS DIAGRAM

附件位置 / THE ATTACHMENT POSITION

手轮位置 / THE POSITION OF THE HAND WHEEL

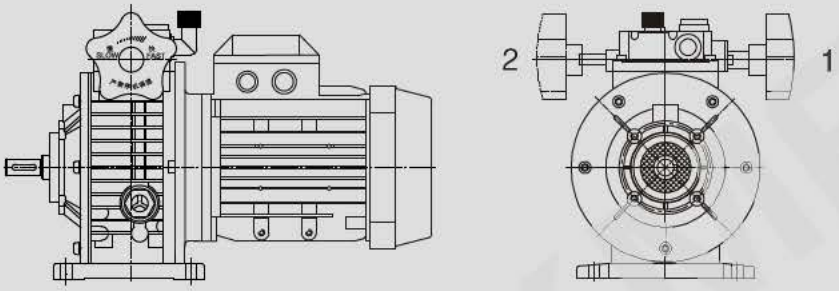

注：如没有特别说明，手轮将按照如图1位和B3安装方位的组合方式提供。

Note:if no special note,the handwheel will be in accordance with the figure 1 and B3 installation azimuth combination is provided.

电机接线盒位置 / MOTOR TERMINAL BOX POSITION

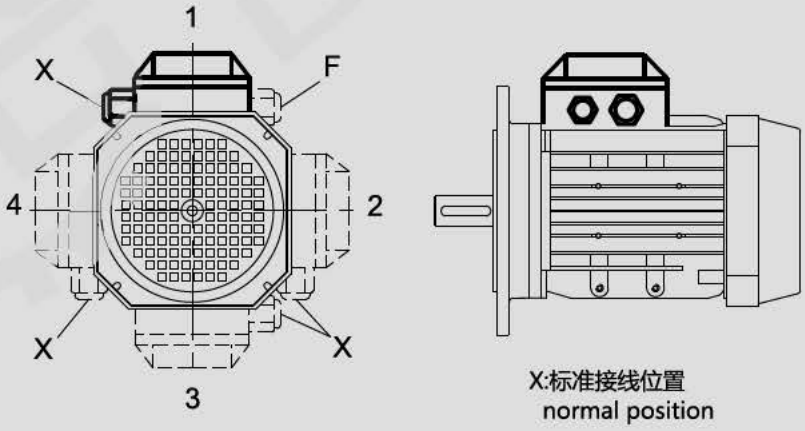

Web: www.aokman gearbox.com Email: aokman@aokman drive.com

蜗轮蜗杆减速机与无级变速机的组合

NMRV+UD COMBINATION OF NMRV WORM GEAR UNITS & UD SPEED VARIATOR

型号说明 / MODEL ILLUMINATE

NMRV-UD蜗轮蜗杆减速机与无级变速机组合
Combination of worm gear units and stepless speed variator

NMRV	063 /	UD	L	005 /	50 /	E /	FA1 /	SS1 /	B3 /	0.37-4P /	BMG /	1 /	X
①	②	③	④	⑤	⑥	⑦	⑧	⑨	⑩	⑪	⑫	⑬	⑭

NO	说明	Comments
1	蜗轮蜗杆减速机系列代号	Code for worm gear units series:
2	蜗轮蜗杆减速机中心距（规格）	Central distance of worm gear units(spec)
3	无级变速机系列代号	Code of stepless speed variator
4	1.L:铝合金机壳 2.T：铸铁机壳	1.L:Aluminium alloy housing 2.T:Cast iron casing
5	无级变速机机座号	Continuously variable transmission model
6	减速机速比 (i=5,7.5,10,15,20,25,30,40,50,60,80,100)	Speed ratio of reducer (i=5,7.5,10,15,20,25,30,40,50,60,80,100)
7	1.无代号表示不带蜗杆同向尾出轴 2.E：带蜗杆同向尾出轴	1.No mark means single extension worm shaft 2.E:Double extension worm shaft
8	1.无代号表示不带输出法兰 2.FA,FB,FC,FD,FE(1/2):输出法兰代号和位置	1.No mark means without output flange 2.FA、FB、FC、FD、FE(1/2):output Flange and position
9	1.无代号表示孔输出 2.SS(1/2):单向输出轴和位置 3.DS：双向输出轴	1.No mark means hole output 2.SS(1/2):Single output shaft and position 3.DS:Double output shaft
10	安装方位代号	Installation position code
11	1.无代号表示不带电机 2.0.37-4P: 电机功率、级数	1. No mark means without motor 1.0.37-4P: Model motors(poles of power)
12	1.无代号表示不带制动器 2.BMG:制动器	1.No mark means without brake 2.BMG:brake
13	电机接线盒位置，默认位置1可以不写	Position of motor terminal box default position 1 not to write out is ok
14	电机进线位置，默认位置X 可以不写	Coil position for motor , default position X not to write out is ok

示例Example：**NMRV063 / UDL005 / 40 / FA2 / SS1 / B3**

Web: www.aokman gearbox.com Email: aokman@aokman drive.com

NMRV+UD外形尺寸图表 / OUTLINE DIMENSION SHEET

NMRV+UD尺寸 / NMRV+UD Size

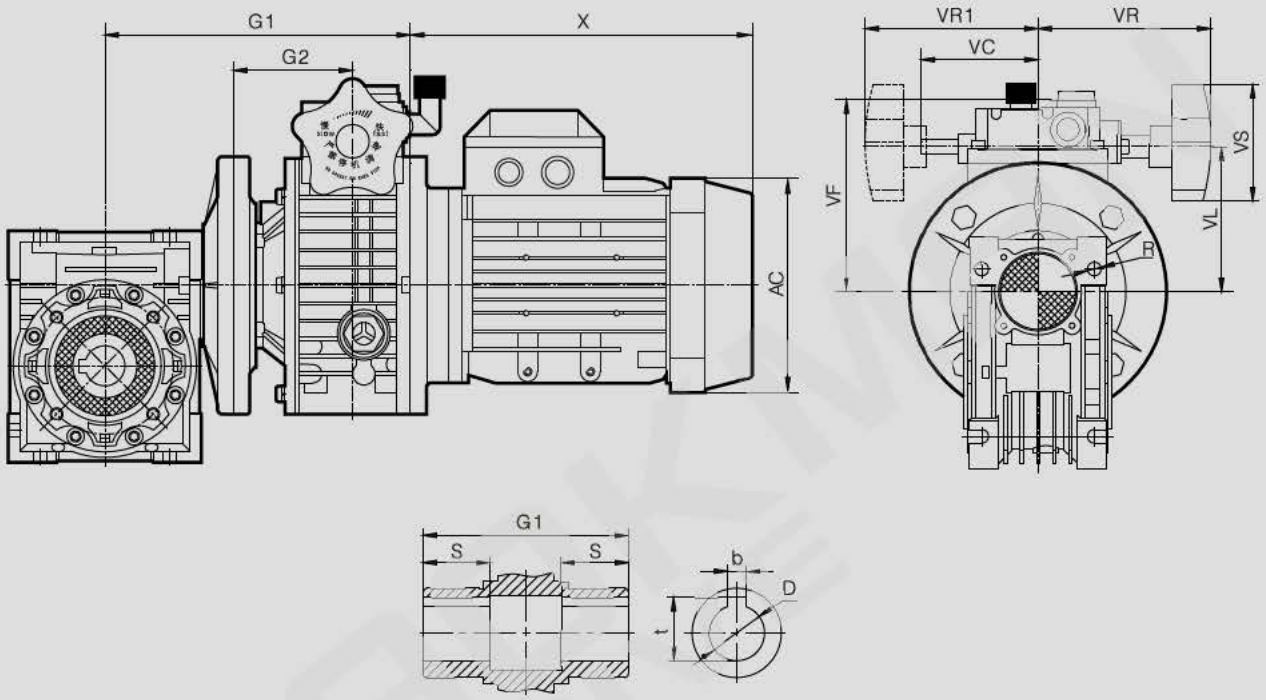

型号 (model)	D(H8)	b	t	S	G1	G2	VF	VL	VR	VR1
NMRV030-UDL002	14	5	16.3	21	167.5	119.5	111	78	110	110
NMRV040-UDL002	18(19)	6	20.8(21.8)	26	182.5	134.5	111	78	110	110
NMRV040-UDL005					180	144	123	90	110	110
NMRV050-UDL002	25(24)	8	28.3(27.3)	30	192.5	144.5	111	78	110	110
NMRV050-UDL005					190	154	123	90	110	110
NMRV063-UDL005	25(28)	8	28.3(31.3)	36	205	169	123	90	110	110
NMRV063-UDL010					234	180.5	140	107	120	120
NMRV075-UDL005	28(35)	8(10)	31.3(38.3)	40	222.5	186.5	123	90	110	110
NMRV075-UDL010					251.5	198	140	107	120	120
NMRV075-UDT020					300.5	227.5	144	122	150	-
NMRV090-UDL010	35(38)	10	38.3(41.3)	45	268.5	215	140	107	120	120
NMRV090-UDT020					317.5	244.5	144	122	150	-
NMRV110-UDL010	42	12	45.3	50	299	245.5	140	107	120	120
NMRV110-UDT020					348	275	144	122	150	-
NMRV110-UDT030					368	291	188	150	160	-
NMRV130-UDT020	45	14	48.3	60	368	295	144	122	150	-
NMRV130-UDT030					368	311	188	150	160	-

NMRV+UD外形尺寸图表 / OUTLINE DIMENSION SHEET

NMRV+UD组合表 / NMRV+UD Possible geometrical combinations

n_1	kW	NMRV+UD		i_{nmrv}											
				5	7.5	10	15	20	25	30	40	50	60	80	100
1400r/min	0.18kW	UDL002	040	■	■	■	■	■	■	■	■	■			
			050								■	■	■	■	■
	0.25kW	UDL005	040		■	■	■	■	■	■	■				
			050								■	■	■	■	
	0.37kW	UDL005	050	■	■	■	■	■	■	■	■	■			
			063								■	■	■	■	■
	0.55kW	UDL010	063		■	■	■	■	■	■	■	■			
			075									■	■	■	
			090											■	■
	0.75kW	UDL010	063		■	■	■	■	■	■	■				
			075									■	■		
			090										■	■	■
			110											■	■
	1.1kW	UDT020	075		■	■	■	■	■	■	■				
			090			■	■	■	■	■	■	■			
			110									■	■	■	■
			130										■	■	■
	1.5kW	UDT020	075		■	■	■	■	■	■	■				
			090		■	■	■	■	■	■	■				
			110									■	■		
			130										■	■	■
	2.2kW	UDT030	110		■	■	■	■	■	■	■				
			130								■	■	■	■	■
	3kW	UDT030	110		■	■	■	■	■	■	■				
			130		■	■	■	■	■	■	■	■			
	4kW	UDT030	110		■	■	■	■	■	■					
			130		■	■	■	■	■	■	■				

Web: www.aokman gearbox.com Email: aokman@aokman drive.com

NMRV+UD性能参数 / PERFORMANCE PARAMETER

NMRV..UD..(n1=1400r/min) / 性能参数 Performance parameter

P_{1n} (kW)	n_2 (r/min)	i	i_{NMRV}	M_{2n} (Nm)		
0.18	117 ~ 22.5	12 ~ 61.5	7.5	9 ~ 18	NMRV040-UDL002	6324
	88 ~ 17	16 ~ 82	10	12 ~ 23		
	58.7 ~ 11.3	24 ~ 123	15	17 ~ 32		
	44 ~ 8.5	32 ~ 164	20	22 ~ 40		
	35.2 ~ 6.8	40 ~ 205	25	27 ~ 47		
	29.3 ~ 5.7	48 ~ 246	30	30 ~ 51		
	22 ~ 4.3	64 ~ 328	40	37 ~ 62		
	17.6 ~ 3.4	80 ~ 410	50	43 ~ 60		
	22 ~ 4.3	64 ~ 328	40	38 ~ 63	NMRV050-UDL002	6324
	17.6 ~ 3.4	80 ~ 410	50	44 ~ 73		
	14.7 ~ 2.8	96 ~ 492	60	50 ~ 80		
	11 ~ 2.1	128 ~ 656	80	59 ~ 82		
	8.8 ~ 1.7	160 ~ 820	100	66 ~ 79		
0.25	133 ~ 26.7	10.5 ~ 52.5	7.5	13 ~ 30	NMRV040-UDL005	7114
	100 ~ 20	14 ~ 70	10	16 ~ 38		
	66.7 ~ 13.3	21 ~ 105	15	24 ~ 53		
	50 ~ 10	28 ~ 140	20	32 ~ 68		
	40 ~ 8	35 ~ 175	25	38 ~ 80		
	33.3 ~ 6.7	42 ~ 210	30	43 ~ 89		
	25 ~ 5	56 ~ 280	40	48 ~ 96		
	25 ~ 5	56 ~ 280	40	54 ~ 112	NMRV050-UDL005	7114
	20 ~ 4	70 ~ 350	50	59 ~ 122		
	16.7 ~ 3.3	84 ~ 420	60	66 ~ 135		
	12.5 ~ 2.5	112 ~ 560	80	72 ~ 120		
0.37	133 ~ 26.7	10.5 ~ 52.5	7.5	19 ~ 36	NMRV050-UDL005	7124
	100 ~ 20	14 ~ 70	10	25 ~ 47		
	66.7 ~ 13.3	21 ~ 105	15	36 ~ 65		
	50 ~ 10	28 ~ 140	20	46 ~ 82		
	40 ~ 8	35 ~ 175	25	55 ~ 97		
	33.3 ~ 6.7	42 ~ 210	30	61 ~ 107		
	25 ~ 5	56 ~ 280	40	76 ~ 124		
	20 ~ 4	70 ~ 350	50	89 ~ 120		
	25 ~ 5	56 ~ 280	40	79 ~ 134	NMRV063-UDL005	7124
	20 ~ 4	70 ~ 350	50	92 ~ 155		
	16.7 ~ 3.3	84 ~ 420	60	104 ~ 173		
	12.5 ~ 2.5	112 ~ 560	80	125 ~ 173		
	10 ~ 2	140 ~ 700	100	139 ~ 150		
0.55	133 ~ 26.7	10.5 ~ 52.5	7.5	26 ~ 49	NMRV063-UDL010	8014
	100 ~ 20	14 ~ 70	10	34 ~ 63		

NMRV+UD性能参数 / PERFORMANCE PARAMETER

NMRV..UD..(n1=1400r/min) / 性能参数 Performance parameter

P_{1n} (kW)	n_2 (r/min)	i	i_{NMRV}	M_{2n} (Nm)		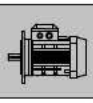
0.55	66.7 ~ 13.3	21 ~ 105	15	48 ~ 88	NMRV063-UDL010	8014
	50 ~ 10	28 ~ 140	20	62 ~ 112		
	40 ~ 8	35 ~ 175	25	75 ~ 133		
	33.3 ~ 6.7	42 ~ 210	30	81 ~ 146		
	25 ~ 5	56 ~ 280	40	105 ~ 179		
	20 ~ 4	70 ~ 350	50	123 ~ 207		
	20 ~ 4	70 ~ 350	50	129 ~ 216	NMRV075-UDL010	8014
	16.7 ~ 3.3	84 ~ 420	60	146 ~ 242		
	12.5 ~ 2.5	112 ~ 560	80	176 ~ 250		
	12.5 ~ 2.5	112 ~ 560	80	189 ~ 309	NMRV090-UDL010	8014
	10 ~ 2	140 ~ 700	100	218 ~ 350		
0.75	133 ~ 26.7	10.5 ~ 52.5	7.5	39 ~ 73	NMRV063-UDL010	8024
	100 ~ 20	14 ~ 70	10	51 ~ 94		
	66.7 ~ 13.3	21 ~ 105	15	72 ~ 132		
	50 ~ 10	28 ~ 140	20	92 ~ 168		
	40 ~ 8	35 ~ 175	25	112 ~ 199		
	33.3 ~ 6.7	42 ~ 210	30	126 ~ 219		
	25 ~ 5	56 ~ 280	40	156 ~ 232		
	20 ~ 4	70 ~ 350	50	185 ~ 310		
	20 ~ 4	70 ~ 350	50	192 ~ 320	NMRV075-UDL010	8024
	16.7 ~ 3.3	84 ~ 420	60	219 ~ 300		
	16.7 ~ 3.3	84 ~ 420	60	230 ~ 389	NMRV090-UDL010	8024
	12.5 ~ 2.5	112 ~ 560	80	265 ~ 428		
	10 ~ 2	140 ~ 700	100	303 ~ 410		
	12.5 ~ 2.5	112 ~ 560	80	302 ~ 503	NMRV110-UDL010	8024
	10 ~ 2	140 ~ 700	100	348 ~ 575		
1.1	133 ~ 26.7	10.5 ~ 52.5	7.5	59 ~ 111	NMRV075-UDT020	90S4
	100 ~ 20	14 ~ 70	10	77 ~ 144		
	66.7 ~ 13.3	21 ~ 105	15	110 ~ 203		
	50 ~ 10	28 ~ 140	20	142 ~ 258		
	40 ~ 8	35 ~ 175	25	172 ~ 308		
	33.3 ~ 6.7	42 ~ 210	30	195 ~ 340		
	25 ~ 5	56 ~ 280	40	245 ~ 360		
	100 ~ 20	14 ~ 70	10	78 ~ 146	NMRV090-UDT020	90S4
	66.7 ~ 13.3	21 ~ 105	15	113 ~ 208		
	50 ~ 10	28 ~ 140	20	146 ~ 266		
	40 ~ 8	35 ~ 175	25	177 ~ 320		
	33.3 ~ 6.7	42 ~ 210	30	202 ~ 356		
	25 ~ 5	56 ~ 280	40	256 ~ 442		

Web: www.aokman gearbox.com Email: aokman@aokman drive.com

NMRV+UD性能参数 / PERFORMANCE PARAMETER

NMRV..UD..(n1=1400r/min) / 性能参数 Performance parameter

P_{1n} (kW)	n_2 (r/min)	i	i_{NMRV}	M_{2n} (Nm)		
1.1	20 ~ 4	70 ~ 350	50	304 ~ 517	NMRV090-UDT020	90S4
	20 ~ 4	70 ~ 350	50	320 ~ 550	NMRV110-UDT020	90S4
	16.7 ~ 3.3	84 ~ 420	60	368 ~ 625		
	12.5 ~ 2.5	112 ~ 560	80	455 ~ 754		
	10 ~ 2	140 ~ 700	100	522 ~ 710		
	16.7 ~ 3.3	84 ~ 420	60	373 ~ 623	NMRV130-UDT020	90S4
	12.5 ~ 2.5	112 ~ 560	80	460 ~ 749		
	10 ~ 2	140 ~ 700	100	531 ~ 868		
1.5	133 ~ 26.7	10.5 ~ 52.5	7.5	78 ~ 148	NMRV075-UDT020	90L4
	100 ~ 20	14 ~ 70	10	102 ~ 192		
	66.7 ~ 13.3	21 ~ 105	15	147 ~ 270		
	50 ~ 10	28 ~ 140	20	190 ~ 344		
	40 ~ 8	35 ~ 175	25	229 ~ 330		
	33.3 ~ 6.7	42 ~ 210	30	260 ~ 390		
	25 ~ 5	56 ~ 280	40	327 ~ 360		
	133 ~ 26.7	10.5 ~ 52.5	7.5	77 ~ 150	NMRV090-UDT020	90L4
	100 ~ 20	14 ~ 70	10	104 ~ 195		
	66.7 ~ 13.3	21 ~ 105	15	150 ~ 277		
	50 ~ 10	28 ~ 140	20	194 ~ 355		
	40 ~ 8	35 ~ 175	25	236 ~ 427		
	33.3 ~ 6.7	42 ~ 210	30	270 ~ 474		
	25 ~ 5	56 ~ 280	40	341 ~ 589		
	20 ~ 4	70 ~ 350	50	406 ~ 560		
	20 ~ 4	70 ~ 350	50	426 ~ 733	NMRV110-UDT020	90L4
	16.7 ~ 3.3	84 ~ 420	60	490 ~ 833		
	16.7 ~ 3.3	84 ~ 420	60	498 ~ 831	NMRV130-UDT020	90L4
	12.5 ~ 2.5	112 ~ 560	80	614 ~ 999		
	10 ~ 2	140 ~ 700	100	696 ~ 1100		
2.2	133 ~ 26.7	10.5 ~ 52.5	7.5	120 ~ 226	NMRV110-UDT030	100L1-4
	100 ~ 20	14 ~ 70	10	157 ~ 294		
	66.7 ~ 13.3	21 ~ 105	15	228 ~ 418		
	50 ~ 10	28 ~ 140	20	298 ~ 549		
	40 ~ 8	35 ~ 175	25	364 ~ 664		
	33.3 ~ 6.7	42 ~ 210	30	413 ~ 717		
	25 ~ 5	56 ~ 280	40	533 ~ 931		
	25 ~ 5	56 ~ 280	40	542 ~ 932	NMRV130-UDT030	100L1-4
	20 ~ 4	70 ~ 350	50	648 ~ 1097		
	16.7 ~ 3.3	84 ~ 420	60	746 ~ 1246		
	12.5 ~ 2.5	112 ~ 560	80	921 ~ 1499		
	10 ~ 2	140 ~ 700	100	1040 ~ 169		

NMRV+UD性能参数 / PERFORMANCE PARAMETER

NMRV..UD..(n1=1400r/min) / 性能参数 Performance parameter

P_{1n} (kW)	n_2 (r/min)	i	i_{NMRV}	M_{2n} (Nm)		
3.0	133 ~ 26.7	10.5 ~ 52.5	7.5	160 ~ 302	**NMRV110-UDT030**	**100L2-4**
	100 ~ 20	14 ~ 70	10	210 ~ 392		
	66.7 ~ 13.3	21 ~ 105	15	304 ~ 558		
	50 ~ 10	28 ~ 140	20	398 ~ 732		
	40 ~ 8	35 ~ 175	25	485 ~ 885		
	33.3 ~ 26.7	42 ~ 210	30	547 ~ 956		
	25 ~ 5	56 ~ 280	40	711 ~ 1030		
	133 ~ 26.7	10.5 ~ 52.5	7.5	160 ~ 301	**NMRV130-UDT030**	**100L2-4**
	100 ~ 20	14 ~ 70	10	211 ~ 395		
	66.7 ~ 13.3	21 ~ 105	15	307 ~ 563		
	50 ~ 10	28 ~ 140	20	402 ~ 733		
	40 ~ 8	35 ~ 175	25	490 ~ 885		
	33.3 ~ 6.7	42 ~ 210	30	562 ~ 973		
	25 ~ 5	56 ~ 280	40	720 ~ 1242		
	20 ~ 4	70 ~ 350	50	864 ~ 1462		
4.0	133 ~ 26.7	10.5 ~ 52.5	7.5	213 ~ 402	**NMRV110-UDT050**	**112M4**
	100 ~ 20	14 ~ 70	10	279 ~ 523		
	66.7 ~ 13.3	21 ~ 105	15	405 ~ 744		
	50 ~ 10	28 ~ 140	20	530 ~ 975		
	40 ~ 8	35 ~ 175	25	647 ~ 1020		
	133 ~ 26.7	10.5 ~ 52.5	7.5	214 ~ 401	**NMRV130-UDT050**	**112M4**
	100 ~ 20	14 ~ 70	10	281 ~ 527		
	66.7 ~ 13.3	21 ~ 105	15	410 ~ 751		
	50 ~ 10	28 ~ 140	20	536 ~ 978		
	40 ~ 8	35 ~ 175	25	653 ~ 1180		
	33.3 ~ 6.7	42 ~ 210	30	749 ~ 1298		
	25 ~ 5	56 ~ 280	40	960 ~ 1650		

Web: www.aokman gearbox.com Email: aokman@aokman drive.com

安装方位图 / INSTALLATION POSITION DIAGRAM

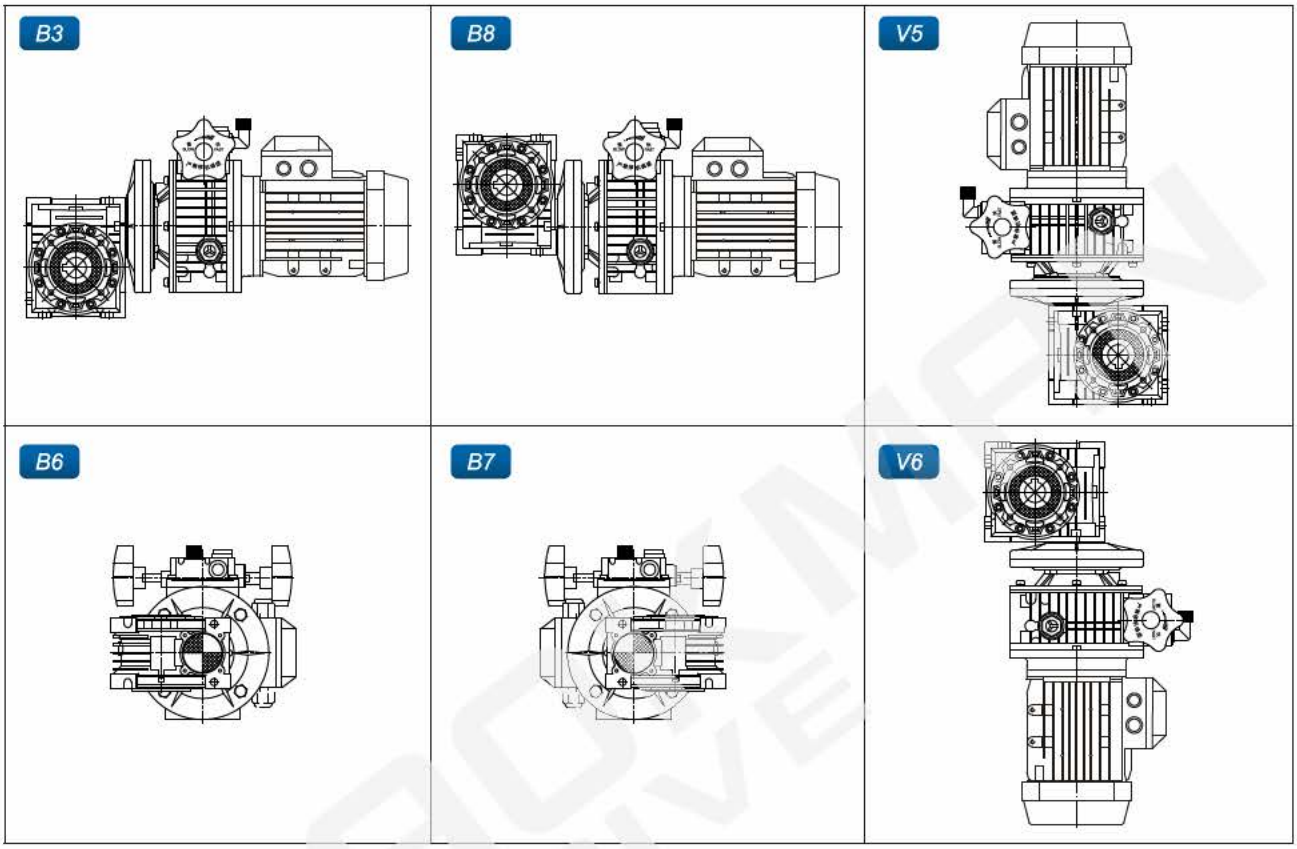

附件位置 / The attachment position

NMRV...UD...手轮位置 / The position of the hand wheel

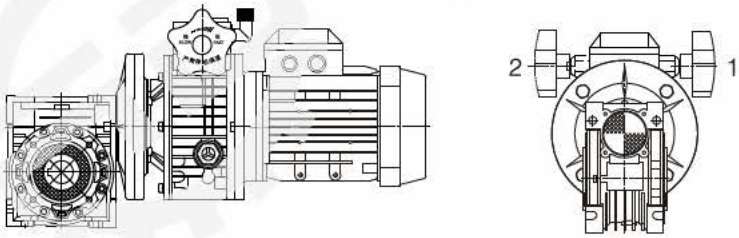

注：如没有特别说明，手轮将按照如图1位和B3安装方位的组合方式提供。

Note : If no special note,the handwheel will be in accordance with the figure 1 and B3 installation azimuth combination is provided.

NMRV...UD...电机接线盒位置 / The position of the motor terminal box

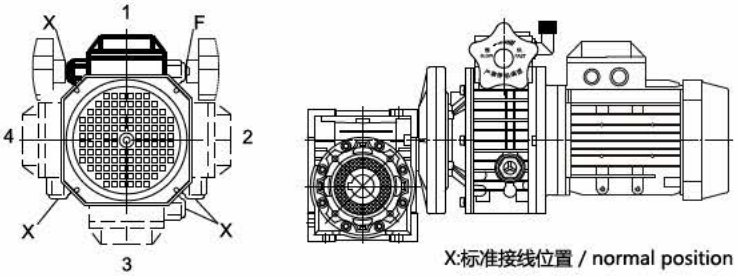

注：如对电机接线盒位置有特别要求，订购时须参考上图的要求指定接线盒方位，否则接线盒方位将按安装方位图表中的方位提供。

Note : If the motor terminal box position havespecial requirements, when ordeing reference is made to the above requirements specialed terminal box position, or junction box range according to installation position chart position is provided.

DIRECTIONS FOR USE

使用说明

安装方法 / INSTALLATION METHODS

安装使用与保养 / INSTALLATION USAGE & MAINTENANCE

使用须知 / INSTRUCTION

润滑油 / LUBRICATION

订货须知 / NOTICE FOR ORDERING

运转故障 / MULFUNCTIONS

减速机负载特征表(参考件) / MCHARGE CHARACTERISTIC CHART(FOR REFEREBCE)

售后服务 / AFTER-SALE SERVICE

安装方法 / INSTALLATION METHODS

使用限制/Critical applications

这本样本给出的参数基本上是按B3安装方位来编的，即第一级没有完全浸入油中。对于其他安装方位和输入转速，请参考下面表格中相应参数。当遇到下列应用情况时，如有必要请与我们技术服务人员联系。

All the mounting type mentioned in this catalog are all according to B3,which is to say,the first stage is not immersed in oil.For other mounting position and input speed,please refer to the following data in the chart.When the occasion below happens,please contact our techniques if necessary.

1. 在原有上提高转速时，
2. 应用在惯性特别大的设备上时；
3. 应用在如升降机（需要自锁考虑）时；
4. 当减速机出现故障有可能会对操作者造成危害时；
5. 应用在减速机过度疲劳状态时；
6. 工作环境温度低于-5℃或高于40℃时；
7. 在化学腐蚀环境中使用时；
8. 在盐性环境中使用时；
9. 在辐射性高的环境中使用时；
10.在环境气压不在正常大气压力下使用时；
11.安装方位在这样本中没有被提到。

1. As a speed increasing;
2. Applications with especially high inertia;
3. Use as a lifting winth;
4. Use in services thant could be hazardous for people if the reductions unit dails.
5. Applications with high dynamic strain on the case of the reduction unit.
6. In places with T°under -5°C or over 40°C.
7. Use in chemically aggressive environments.
8. Use in a salty environment.
9. Use in raadioactive environments.
10.Use in environments pressures other than atmospheric pressure.
11.Mounting positions not envisaged in the catalogue.

避免把减速机部分或整台浸入水中或其他液体中。

Avoid applications where even partial immersion of the reduction unit is required.

减速机承受的最大负载扭矩不能超过两倍于性能参数表中规定的正常扭矩（当服务系数fs=1时）；这里最大负载扭矩是指承受瞬间短暂的过载，他出现在过载启动、刹车、振动或其他动态操作环境中。

The maximum torque that the gear reducer can support must not exceed two times the nominal torque (fs=1) stated in the performance tables.Intended for momentary overloads due to starting at full load,braking,shocks or other causes,particularly those are dynamic.

NMRV	025	030	040	050	063	075	090	105	110	130	150
V5: 1500<n1<3000	-	-	-	-	-	B	B	B	B	B	B
n1>3000	B	B	B	B	B	A	A	A	A	A	A
v6	B	B	B	B	B	B	B	B	B	B	B

A. 不被推荐的使用方式
B. 需要确定应用情况合适性或与我们技术服务人员联系

A. Application not recommended
B. Check the application and/or call our technical service

安装使用与保养 / INSTALLATION USAGE & MAINTENANCE

NMRV系列安装使用与保养 / NMRV installation usage & maintenance

安装减速机时要注意以下一些事项：

(1) 减速机与机械设备装配之前，要检查减速机输出轴的旋转方向是否正确；
(2) 减速机与原动机、设备装配之前，应检查各轴径、孔径、键和键槽的偏差尺寸，避免装配过紧、过松影响减速机性能；
(3) 减速机必须牢固地安装在机械设备上，避免有松动或振动；
(4) 尽可能地避免减速机暴露在烈日阳光下和恶劣环境中；
(5) 如果减速机存放时间长达4-6个月，应检查油封是否浸润在润滑油中，可能油封唇口会粘在轴上，甚至失去了弹性，由于适合的弹性是油封必须的工作条件，所以推荐更换油封；
(6) 所有橡胶件和透气孔不能沾有油漆；
(7) 与减速机的空心轴或实心轴配合连接时，应在轴上配合部分涂上润滑油，以免卡死或氧化；
(8) 使用时必须检查油位（如油位镜孔或打开油塞，小型号是没有的）；
(9) 使用新减速机时，不能满负载起动，应该逐步增大负载；
(10) 使用各类电机直连型减速机时，若电机重量偏大，应设支撑装置；
(11) 确保电机风扇附近有良好的通风环境，以免影响散热效果；
(12) 减速机的标准工作环境温度是-5℃至40℃，如果不在这范围时，请与我们技术服务人员联系。

To install the gear units it is necessary to note the following recommendations:

(1) Check the correct direction of rotation of the gear units output shaft before fitting the unit to the machine.
(2) Before mounting with the prime mover and device,please check the reducer's every axial diameter,aperture key, and key slot,to be sure their dimensions are not deviation,and avoid assembling too tight or too loose,unless it will influence the reducer's performance.
(3) The mounting on the machine must be stable to avoid any vibration.
(4) Whenever possible,protect the gear units against solar radiation and bad weather.
(5) In the case of particularly lengthy periods of storage(4-6 months),if the oil seal is not immersed in the lubricant inside the unit,it is recommended to change it since the rubber could stick to the shaft or may even have lost the elasticity it needs to function properly.
(6) Painting must definitely not go over rubber parts and the holes on the breather plugs.
(7) When connect with hollow or solid shaft,please grease the joint to avoid lock or oxidation.
(8) Check the correct level of the lubricant through the indicator,if there is one.
(9) Starting must take place gradually,without immediately applying the maximum load.
(10) Supporting unit is required when using various of reducer matched with motor directiy and the weight of motor is a little bigger than common.
(11) Ensure the motor cools correctly by assuring good passage of air form along fan side.
(12) The normal working ambient temperature is between -5℃ and 40℃. If not, Pls contact with Aokman.

安装使用与保养 / INSTALLATION USAGE & MAINTENANCE

UD系列安装使用与保养 / UD installation usage & maintenance

(1) 轴伸形式全部为圆柱形，按《圆柱形轴伸》GB1569-1990选定，键联接按《普通平键》GB1095－2003选定。
(2) 联轴器与电动机连接时应使轴线保持同心，安装误差不应大于所用联轴器的允许误差值。
(3) 输出轴装联轴器或带轮时，用轴端螺孔压入，或加热装备，严禁捶打！
(4) 机械无级变速机不宜用于可能超负荷或堵转适用场合。
(5) 调速应在运转进行，严禁停车转动调速手轮！
(6) 操作盒下的两端调速限位螺钉已调整好，请勿再动！
(7) 本机不宜工作在高于40℃的环境中，温升不得高于45℃。关于本机的温升请看下面的介绍：
变速机采用四极电机时，此时部件在跑合（空车运转）开始，温度高于正常工作的环境温度约为40－50℃。跑合60－80小时后，温升逐渐下降，此后温度高于环境温度20℃，并保持稳定的温升，跑合时高的温升影响正常允许的工作条件，但对部件的使用寿命并无有害影响。
(8) 变速机采用润滑油油浴润滑。润滑油牌号为Ub-3x，使用前请检查油位。
(9) 出厂前润滑油已加入，首次使用1000小时后应更换润滑油，以后每隔5000小时换一次油。
(10) 变速机内润滑油应保持在油标的三分之二高度，用户应经常检查油位高度，严禁在润滑不良的情况下使用。操作盒上的透气螺母出厂时为防止搬运中漏油已旋紧，运转时需松开，严禁未松开使用！

(1) The shapes of shaft extension are all cylindrical. It is subject to GB1569-1990 Cylindrical shaft extension. The key joint refers to GB1095-2003 Ordinary flat key.
(2) The shaft lines should be kept concentric when the coupling is connected with a motor. The installation error should be no more than the tolerance value of coupling.
(3) When the output shaft is installed with the coupling or belt wheel, they should be pressed into the screw hole on shaft end. Or assembled by heating. No hammering on it!
(4) The mechanical stepless variator is not used in such an occasion wheel overload or running-blockage happen to occur.
(5) Speed-regulation should be effected in running. Do not turn the hand whel of speed-regulation when the machine stops!
(6) The limit screws of speed-regulation on two ends under the operating box are well adjusted, Please don't touch them!
(7) This set is not suited to work in the environment over 40℃,especially no more than 45℃ when the temperature rises.In regard to its temperature,rise please read the explanation as follows:
If a 4-pole motor is used for the speed variator, the temperature under running-in(empty running) is 40-50℃ higher than that of normal working environment.. After running-in up to 60-80hours,the temperature rise will go down gradually. From that time on, it is 20℃ higher than of environment, and the temperature will keep on rising stably. The high temperature rise in running will affect normal permis-sive working condition, but it won't bring any bad effects to the service life of parts.
(8) The liquid lubricating oil is used for the speed variator. Its trade mark is Ub-3x. Please check up the oil level before use.
(9) The machine is filled with lubricating oil before leaving factory. When it starts to work up to 2000 hours for the first time, its lubricating oil should be replaced, changing the lubricating oil every 5000 hours later.
(10) The lubricating oil level inside the speed variator should be kept at the height of two-third in the oil scale.Users should usually check the height of oill evel. It is strictly prohibited to operate it when short of lubricating oil. The air screw nut on the operating box is screwed up for preventing from oil leakage in moving before leaving factory. It should ba loosed when it starts to run. It is strictly forbidden to use it before loosing!

使用须知 / INSTRUCTION

使用须知

工作环境温度不在表中范围内，请与我们技术服务人员联系。

(1) 当工作环境温度低于－30℃或高于60℃时，要使用特殊材质的油封。

(2) 当工作环境温度低于0℃时，必须考虑下列情况：

●选用的电机必须在低温下能正常工作；

●电机的功率必须满足在低温下有较大启动力矩要求；

●如果减速机箱体的材质是铸铁，在温度－15℃以下时，箱体会变得很脆，要注意尽量避免撞击；

●在开始使用阶段时，由于润滑油的粘度很高，可能会产生一些问题，所以刚开始启动时最好让它空载运转几分钟。减速机运转大约10000小时后，应更换润滑，换油频率按减速机实际运行情况和工作环境条件而定。

(3) NMRV025、030、040、050、063、075、090规格的减速机在出厂时已加注了润滑油，可以按照样本中安装方位所提到的方位安装。V5或V6安装时，请与我们技术服务人员联系。

(4) 减速机NMRV110、130和150规格在出厂时已加注了矿物润滑油。

(5) 无级变速机在出厂时也加注了矿物润滑油（广研Ub-3x）。

(6) 减速机NMRV110、130和150规格的安装方位在下单时要说明，否则润滑油理按B3方位提供。

(7) NMRV系列的减速机，在特定的工作环境，需配排气阀（可选配件）。

(8) 对于齿轮箱，首次换油必须在工作大约300小时（齿轮磨合期）后进行，在换油时应使用合适的清洗剂小心地冲洗齿轮箱，不得将矿物油和合成油混合。

(9) 每3000工作小时，最低程度半年，应检测油以及油位，油封密封不严引起滴漏的常规检测，若是IEC输入的减速机，则检测检查弹性体，必要时进行更换。

(10) 根据不同的工作条件（见下图）而定，最长每三年检测一次，更换矿物油，更换轴承润滑油脂。

(11) 根据不同的工作条件而定，更换输出轴上的油封。

(12) 产品出现故障时，不要拆卸部件，与本公司售后服务部门联系（需提供减速机规格、出厂日期、编号、已使用时间、主机名称、主机生产单位和故障类型）后，再采取合理的措施。

使用须知 / INSTRUCTION

Instruction

In cases of ambient temperature not envisaged in the table, call our Technical Service.

1 In the case of temperature -30℃ or over 60℃. It is necessary to use oil seals with special material.

2 For operating ranges with temperatures under 0℃. It is necessary to consider the following.

- The motors need to be suitable for operation at the envisaged ambient temperature.
- The power of the electric motor needs to be adequate for exceeding the higher starting torques required.
- In the case of reduction units with a cast-iron case, pay attention to impact loads since cast iron may have problems of fragility at temperatures under-15℃.
- During the early stages of service, problems of lubrication may arise due to the high level of viscosity taken on by the oil and so it is wise to have a faw minutes of rotation under no load. The oil needs to be changed after approximately 10000 hours. This period depends on the type of service and the environment where the reduction unit works.

3 The reduction units size NMRV025、030、040、050、063、075、090 are supplied already with lubricant,and can therefore be mounted in any position envisaged in the catalogue. V5/V6 for which you should contact our Technical Service to assess the conditions of use.

4 The reduction units size110、130 and 150 are supplied already with lubricant, mineral oil.

5 The variator speed are supplied complete with lubricant, mineral oil(GUANGYAN Ub-3x)

6 For sizes110、130 and 150, it is necessary to specify the position, otherwise the reduction units are supplied with the quantity of oil relating to pos. B3.

7 NMRV series worm gearbox should mount breather plug (optional parts) under special working condition.

8 For gear units,first oil change should be after about 300 hours(run-in period).The right lotion is required to clean the gear units with care.Never mix the synthetic oil and mineral oil together.

9 Every 3000 working time,at least every 6 months,you have to check the oil and oil level,the seals visually for leakage.For IEC input gear units,the elastomer should be tested or replaced if necessary.

10 Depending on the operating conditions(see chart below),every 3 years at the latest for inspection is needed.Then change the mineral oil and replace the bearing grease.

11 Depending on the operating conditions,change the oil seals on output shaft.

12 Once the malfunctions appear,stop disassembling the parts,and firstly please contact the customer service(the information about specification,delivery date,series number,time used,name of machine,machine manufacturer,malfunction problems is required),then take the reasonable measures.

润滑油 / LUBRICATION

润滑油型号 / Types of lubrication

	环境温度(℃) Ambient Tempreatur(℃) ℃ -50 0 50 +100	ISO粘度 ISO Viscosity Class	SHELL	AGIP	ESSO	MOBIL	CASTROL	BP	广研	润滑油类型 Lubrication type
NMRV025 - 090	-25 +50	VG320	Tivela OIL S320	Telium VSF 320	S320	Glygoyle 30	Alphasyn Pg320	Energol SG-XP 320		合成油 Synthetic oil
NMRV110 - 150	-5 +40	VG460	Omala OIL 460	Blasia 460	Spartan Ep460	Mobilear 634	Alpha MAX 460	Energol GR-XP 460	CKE460	矿物油 Mineral oil
	-15 +25	VG220	Omala OIL 220	Blasia 220	Spartan Ep220	Mobilear 630	Alpha MAX 220	Energol SG-XP 220		
UD	-25 +40	VG32	A.T.F. DXRON	A.T.F. DXRON	A.T.F. DXRON	A.T.F.220	TQ. DXRON II	Autran DX	Ub-3x	矿物油 Mineral oil

适用于正常环境条件下标准减速机的更换时间间隔
Oil change intervals for standard gear units under normal environmental conditions

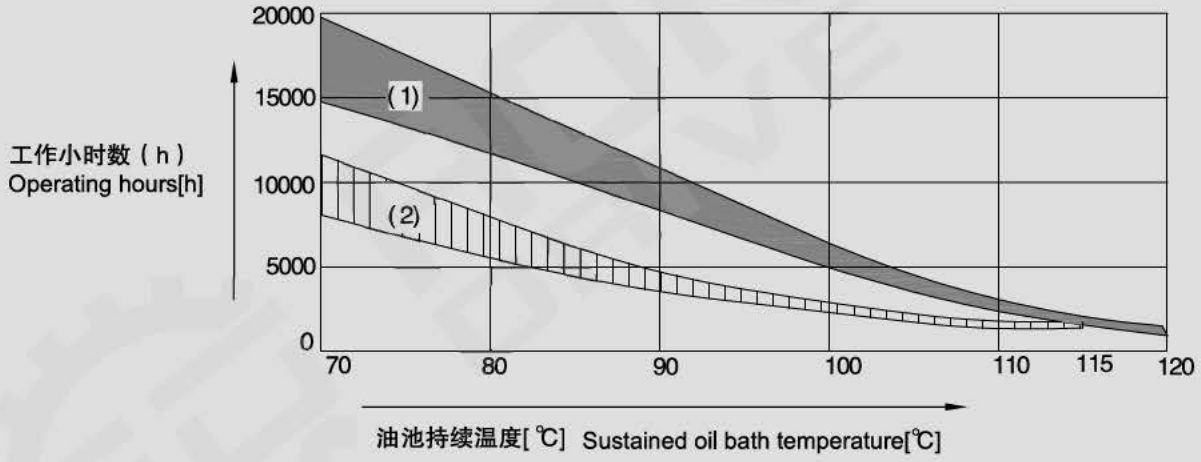

● 每种机油类型的平均值为70℃ / Average value per oil type at 70℃

（1）合成油 / Synthetic oil　　（2）矿物油 / Mineral oil

Web: www.aokman gearbox.com　Email: aokman@aokman drive.com

润滑油 / LUBRICATION

润滑油加注量/Lubricant fill quantity

减速机型号 Gear units		加注量 Fill quantity in liters				单位：升(L)	
		B3	B6	B7	B8	V5	V6
NMRV	NMRV025	0.02					
	NMRV030	0.042					
	NMRV040	0.081					
	NMRV050	0.153					
	NMRV063	0.30					
	NMRV075	0.58					
	NMRV090	1.02					
	NMRV110	3.02	2.55		2.25	3.02	
	NMRV130	4.55	3.55		3.35	4.55	
	NMRV150	7	5.4		5.1	5.4	
		B3、B5		V3、V6		V1、V5	
UD	UDL002	0.13				0.15	
	UDL005	0.23				0.33	
	UDL010	0.33		0.43		0.6	
	UDT020	0.8				1	
	UDT030	1.2				1.5	
	UDT050	2				2.5	

规定的加注量为参考值。精确值的变化与级数和传动比有关。请您在加注润滑油时一定要注意油位螺栓所指示的精确油量。
后期调整安装方式时，您必须根据改变后的安装方式相应调整加注润滑剂。
The specified fill quantities are recommended values.The precise values vary depending on the number of stages and gear ratio.
When filling,it is essential to check the oil level plug since it indicates the precise oil capacity.

#: 采用3级传动减速器时，各自加注3级箱体和2级箱体的润滑油，润滑油互不相通，表中的加注量为3级箱体润滑油加注量。
#: Means the oil quantity in the 3rd stage housing,as this one is separated from the 2nd housing,please fill them separately while in 3 stages.

*: 表示在此安装方式，不能仅凭油位塞加注润滑油，油位需高出油位塞，加注量按表中所示。
*: It means the lubricat can’ t be according to the oil level line plug , but also highter the plug the fill quantity sa shown in the table.

订货须知 / NOTICE FOR ORDERING

存放 / Storage

(1) 有顶棚，防雨雪，无振动。
(2) 在设备和地面之间垫放木块或其他材料。
(3) 开箱后暂不使用的减速机在其加工表面涂上防锈油，并应及时放回包装箱内。
(4) 在定期检查的情况下，两年以及更长时间。在进行检查时，应检查清洁度和机械损伤，检查防锈层是否完好。

(1) Under roof, protected against rain and snow, no shock loads.
(2) Underlay the block and other material between the ground and equipment.
(3) After opening the package,the gearbox should be added with the anti-corrosive oil on its surface,befor using it and then return to the packing containers timesly.
(4) Two years or more given regular inspections.Check for cleanliness and mechanical damage as part of the inspection,Check corrosion protection.

订货须知 / Notice for order

- 订货时请根据使用需要的转速范围，输出转矩，结构形式，对照性能参数、尺寸表、安装和操作方位图，合理选择机型，写明型号标记（下单时是否带电机请说明，一般按不带电机供应）。订货时选择的安装方位应与安装方法一致，不然容易造成漏油，影响使用寿命，若安装方位特殊请另加说明。
- 订货时请尽量选择本目录内的标准产品，如有特殊要求或配用特殊电机请附加说明。
- Please refer to the sheet of performance parameter , NMRV series dimensions, Mounting and operation positions diagram, make reasonable choice of model, and write down model mark to your required revolution scope, output torque and structural from on ordering(when ordering, you should show whether the reducers are equipped with motors, otherwise reducers aren't with motors)
- Please make the best choice of standard products in this catalogue, and give an additional explanation for your special requirement and motors.

运转故障 / MULFUNCTIONS

减速机运转故障 / Gear unit malfunctions

故障 Problem	可能的原因 Possible cause	解决方法 Remedy
异常、均匀的运转噪声 Unusual,regular running noise	A.滚动/碾压噪声:轴承损坏 B.冲击型噪声:齿轮啮合不均匀 A.Meshing/grinding noise:Bearing damage. B.Knocking noise:Irregularity in the gearing	A.检测润滑油,更换轴承 B.请联系澳柯慢客服 A.Check the oil,change bearings B. Please contact with AOKMAN customer service department
异常、不均匀的运转噪声 Unusual,irregular running noise	机油中有异物 Foreign bodies in the oil	A.检测润滑 B.停止运转传动装置,请联系澳柯慢客服 A.Check the oil B.Stop the drive, Please contact with AOKMAN customer service department
机油泄漏 A.在减速机盖上 B.在电机凸缘上 C.在电机轴密封圈上 D.在减速机凸缘上 F.在输出端轴密封圈上 Oil leaking A. From the gear cover plate B. From the motor flange C. From the motor oil seal D. From the gear unit flange F. From the output end oil sea	A. 减速机底座上的橡胶密封发生渗漏 B. 密封圈损坏 C. 减速机没有排气 A. Rubber seal on the gear cover plate leaking B. Seal defective C. Gear unit not vented	A.拧紧各个外盖上的螺钉并且观察减速机。如果机油继续泄露，请向客服服务部咨询 B.请联系澳柯慢客服 C.给减速机排气(参见"安装方式") A.Tighten the bolts on the gear cover plate and observe the gear unit.Oil still leaking: Contactcustomer service B.Please contact with AOKMAN customer service department C.Vent the gear unit(see "Mounting Positions")
机油从排气阀门旁渗出 Oil leaking from breaking valve	A. 机油太多 B. 传动装置安装方式错误 C. 频繁冷起动（机油起泡沫）和/或者较高的油位 A. Too much oil B. Drive operated in incorrect mounting position C. Frequent cold starts(oil foams)and/or high oillevel	A.修正油量(参见"润滑油") B.正确安装排气阀并且矫正油位（参见"安装方式"） A.Correct the oil level("see Sec.Inspection and Maintenance") B.Mount the breather valve correctly(see Sec."Mounting Positions")and correct the oil leve(see"Lubricants")
尽管电机在运转或者传动轴已经被驱动，但是传动轴不转动 Oil leaking from breaking valve	减速机中的轴轮毂联接断裂 Connection between shaft and hub in gear unit interrupted	将减速机或减速电机送修 Send in the gear unit/gearmotor for repair

● 在磨合试运转阶段（24小时的运转时间内），轴密封圈有可能出现短期内的漏油/油脂的现象
Short-term oil/grease leakage at the oil seal is possible in the run-in phase (24 hours running time)

减速机负载特征表(参考件) / MCHARGE CHARACTERISTIC CHART(FOR REFEREBCE)

风机类 AIR BLOWERS	
风机（轴向和径向） Air blower（axial or radial）	A
冷却塔风扇 Fan of cooling tower	B
引风机 Induced draught fan	B
螺旋活塞式风机 Rotary piston type fan	B
蜗轮式风机 Turbo-fan	A
建筑机械类 CONSTRUCTION MACHINERY	
混凝土搅拌机 Concrete mixer	B
卷扬机 Hoist	B
路面建筑机械 Road building machinery	B
钻孔机 Boring mill	B
化工机械类 CHEMICAL MACHINERY	
搅拌机（液体） Mixer（liquid）	A
搅拌机（半液体） Mixer（half liquid）	B
离心机（重型） Centrifuge（heavy）	B
离心机（轻型） Centrifuge（light）	A
冷却滚筒** Cooling rolling drum	B
干燥滚筒** Dry rolling drum	B
搅拌机 Mixer	B
压缩机类 COMPRESSOR	
活塞式压缩机 Piston type compressor	C
蜗轮式压缩机 Turbo-compressor	B
传送运输机类 TRANSMISSION FREIGHTER	
平板传送机 Pan conveyer	B
平衡块升降机 Balance lifter	B
槽式传送机Trough conveyer	B
带式传送机（大件） Ribbon conveyer（large piece）	C
带式传送机（碎料） Ribbon conveyer（small piece）	B
筒式面粉传送机 Drum-type flour conveyer	A
链式传送机 Chain conveyer	B
环式传送机 Ring type conveyer	B
货物升降机 Lifter	B
卷扬机 Hoist	B
连杆式传送机 Crank-connecting conveyer	B
载入升降机 Lifter	B
螺旋式传送机 Worm conveyer	B
钢带式传送机 Steel-band conveyer	B
链式槽型传送机 Chain reed-type conveyer	B
绞车运输机 Crab freighter	B
起重机类 HOIST	
卷扬机齿轮传动装置 Hoist gear assembly	A

转臂式起重传动齿轮装置 Bracket swing gear assembly	B
吊杆起落齿轮传动装置 Derrick gear assembly	B
转向齿轮传动装置 Steering gear assembly	B
行走齿轮传动装置 Moving gear assembly	C
挖泥机类 LAND DREDGER	
筒式传送机 Drum-type conveyer	C
筒式转动机 Drum-type rotation wheel	C
挖泥头 Dredger head	C
机动绞车 Powered crab	B
泵 Pump	B
泵转向齿轮传动装置 Pump turning gear assembly	B
行走齿轮传动装置（履带） Moving gear assembly（apron wheel）	C
行走齿轮传动装置（铁轨） Moving gear assembly（track）	B
食品工业机械类 FOODSTUFF PROCESSING MACHINERY	
灌注及装箱机器 Placer or box filler	A
甘蔗压榨机 Cane crusher	A
甘蔗切断机** Cane cutter	B
甘蔗粉碎机** Cane crasher	C
搅拌机 Mixer	B
酱状物吊筒 Paste bucket	B
装包机 Packager	A
糖甜菜切断机 Beet slicer	B
糖和甜菜清洗机 Beet washing machine	B
发动机及转换器类 MOTOR AND CONVERSION EQUIPMENTS	
频率转换器 Frequency converter	C
发动机 Motor	C
焊接发动机 Welding motor	C
洗衣机类 WASHING MACHINE	
滚筒 Rolling drum	B
洗衣机 Washing machine	B
金属滚轧机类 METAL ROLLER MACHINE	
钢坯剪断机** Steel cutter	C
链式输送机** Chain converter	B
冷轧机** Cold mill	C
连铸成套设备 Continuous casting equipments	B
冷床** Cold bed	B
剪料机头** Cropper	C
交叉转弯输送机** Cross steering transmitter	B
除锈机** Druster	C
重型和中型板轧机** Heavy and medium steel mill	C
捧坯切轧机** Bar mill	C

Web: www.aokman gearbox.com Email: aokman@aokman drive.com

减速机负载特征表(参考件) / MCHARGE CHARACTERISTIC CHART(FOR REFEREBCE)

捧坯转运机类 BAR TRANSMISSION EQUIPMENTS	B	**泵类 PUMPS**	
捧坯推料机 Bar pusher	B	离心泵（稀液体）Centrifugal pump(thin liquid)	A
推床 Push bed	B	离心泵（半液体）Centrifugal pump(half liquid)	B
剪板机** Shears	C	活塞泵 Displacement pump	C
板材摆升降台** Lumber elevator platform	B	柱塞泵 Plunger pump	C
轧辊调整装置 Roll adjusting equipments	B	压力泵 Force pump	C
辊式矫直机 Roller leveling machine	B	**塑料机械类 PLASTIC EQUIPMENTS**	
轧钢机辊道（重型）** Mill rolling way(heavy)	C	压光机** Glazing press	B
轧钢机辊道（轻型）** Mill rolling way(light)	B	挤压机** Ejecting press	B
薄板轧机** Sheet rolling mill	C	螺旋压出机** Spiral extruding machine	B
修整剪切机** Trimming shears	B	混合机** Mixing machine	B
焊管机 Pipe welder	C	**橡胶机械类 RUBBER EQUIPMENT**	
焊管机（带材和线材）Soldering machine(belt material and wire rod)	B	压光机** Glazing press	B
线材拉拔机 Wire drawbench	B	挤压机** Ejecting press	C
金属加工机床类 METAL PROCESSING MACHINE TOOLS		混合搅拌机** Mixing stir machin	B
动力轴 Power shaft	A	捏合机 Kneading machine	B
锻造机** Forging machine	C	滚压机** Roller machine	C
锻锤 Drop hammer	C	**石料、瓷土料加工机械类 STONE PORCELAIN CLAY PROCESSING EQUIPMENTS**	
机床及辅助装置 Machine tool and necessary	A		
机床及主要传动装置 Machine tool and main driving equipment	B	球磨机 Ball crusher	B
金属刨床 Metal facing machine	C	挤压料碎机 Ejecting press and breaker	C
板材矫直机床 Plate-leveling machine tool	C	破碎机 Breaker	C
冲床 Backing-out punch	C	压砖机 Brick press	C
冲压机床 Press machine tool	C	锤料碎机** Beating crusher	C
剪床 Cutting machine	B	转炉** Converter	C
薄板弯曲机床 Sheet bending machine tool	B	筒型磨机** Cylinder mill	C
石油工业机械类 PETROLEUM PROCESSING MACHINERY		**纺织机械类 TEXTILE MACHINERY**	
输油管油泵** Pump of oil pipe line	B	送料机 Feeding machine	B
转子钻井设备 Rotary drilling equipment	C	织布机 Loom machine	B
制纸机类 PAPERING MACHINE		印染机 Dyeing machine	B
压光机** Glazing press	C	精致筒 Purified drum	B
多层纸板机** Multilayer paper board machine	C	威罗机 Welon machine	B
干燥滚筒** Drying cylinder	C	**水处理设备类 WASTER TREATMENT EQUIPMENTS**	
上光滚筒** Glazing cylinder	C	鼓风机** Air blast	B
搅桨机** Masher	C	螺杆泵 Screw pump	B
搅桨擦碎机** Mashing and breaking machine	C	**木料加工机床 WOOD PROCESSING MACHINE TOOL**	
吸水滚** Suction oil	C	剥皮机 Barker	C
潮纸滚压机** Wet paper roller machine	C	刨床 Facing machine	B
吸水滚压机木** Water absorbing roller machine	C	锯床 Saw bench	C
威罗机 Welon machine	C	木材加工机床 Wood processing machine tool	A

注：A—均匀冲击负载；B—中等冲击负载；C—重冲击负载；**—用于24小时工作制。
Note：A-Uniform load；B-Moderate shock load；C-Heavy shock load；**-for 24hour system.

ATA系列轴装式减速机
ATA Series Shaft Munted Gearbox

SMR系列轴装式减速机
SMR Series Shaft Mounted Gearbox

R系列斜齿轮减速电机
R Series Helical Gear Motors

K系列伞斜齿轮减速电机
K Series Bevel Helical Gear Motors

F系列平行轴斜齿轮减速电机
F Series Parallel Shaft Gear Motors

RC系列斜齿轮减速机
RC Series Inline Helical Gear Units

RV蜗轮蜗杆减速机
RV Series Worm Gearbox

KM系列准双曲面齿轮减速机
KM Series Hypoid Gearbox

UDL系列无级变速机
UDL Series Speed Variator

HB系列工业齿轮箱
HB Series Industrial Gearbox

MC系列工业齿轮箱
MC Series Industrial Gearbox

ZY系列平行轴圆柱齿轮箱
ZY Series Parallel Shaft Gearbox

BK系列斗式提升机减速机
BK Series Bucket Elevator Gear Units

X,B系列摆线针轮减速机
X,B Series Cycloidal Reducers

P系列行星减速机
P Series Planetary Gearbox

三相交流异步电机
3 Phase AC Induction Motors