成大齒輪
CHENTA GEAR

IMPERIAL英制尺寸

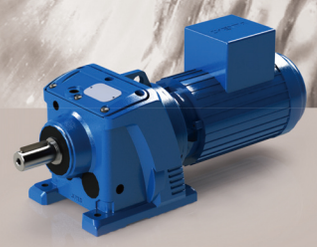

R SERIES

IN-LINE HELICAL GEAR REDUCERS

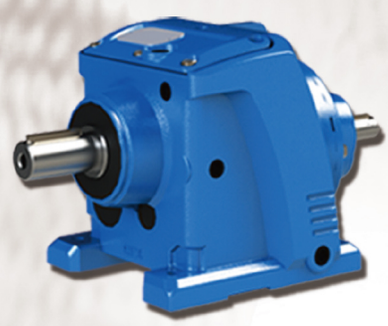

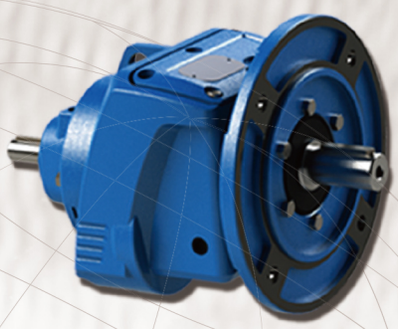

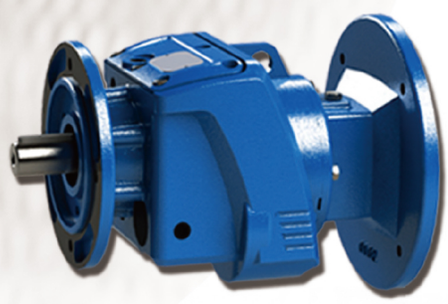

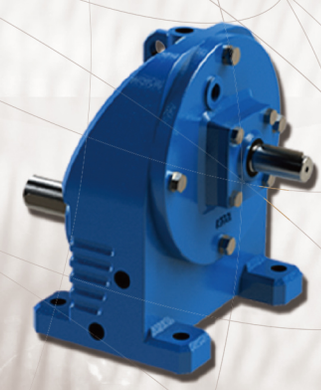

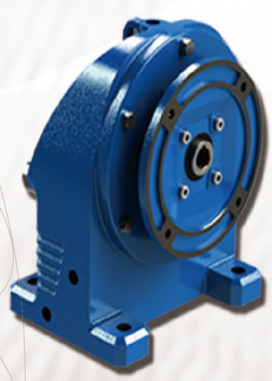

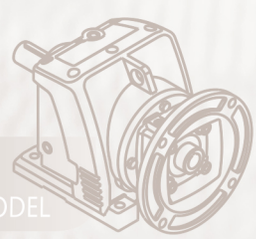

外型安裝尺寸與德國領導品牌相容

INSTALLATION DIMENSION ARE CONSISTENT WITH GERMAN MODEL

SYSTEM CERTIFICATION ISO 9001 SGS

UKAS MANAGEMENT SYSTEMS 005

D&B D-U-N-S® Registered™

CHENTA GEAR SPEED REDUCER

R_IMPERIAL

2015.12

Table of Contents

Introduction

1.1 CHENTA Company Profile 4

1.2 Product Overview 5

1.3 Operation Manual 6

1.4 General Problems & Improvements 8

Product Information and User Guide

2.1 Variants 9

2.2 Order Code for In-line Helical Gear Unit 13

2.3 Selection Table Example 13

2.4 Determining The Service Factor 15

2.5 Tolerances 17

2.6 Mounting Positions 18

2.7 Lubricant Volume 21

In-line Helical Gear Unit R Series

3.1 1750RPM Selection Tables R17~167 22

3.2 1750RPM Selection Tables RX57~107 35

3.3 1750RPM Selection Tables Double Reduction 41

3.4 Dimension Sheets - R Type 60

Solid Input Shaft 84

3.5 Dimension Sheets - RX Type 88

Solid Input Shaft 94

3.6 Dimension Sheets - Double Reduction 96

1.1 CHENTA Company Profile

1. In 1960, Mr. Mao Cheng Chen, president of the company, and two other colleagues in the department of Mechanical Engineering of the Tainan Engineering College (predecessor of Cheng Kung University) established a company called "Chen Ta Machinery Works". It was named "Chen Ta" in remembrance of, and also giving acknowledgement to, their alma mater, Cheng Kung University (called Chen Ta in short) from where Mr. Chen and his colleagues had received their specialized mechanical education.

2. Chen Ta Machinery Works specialized in machining jobs such as grinding/re-building of the crankshafts of automobile and vessel engines, cylinder overhaul, and diesel engine adjustment. Back then, she was the best of her field in southern Taiwan. Due to the excellent technique and the cordial service, the company name was soon well known and the business became prosperous.

3. In 1971, to support a long-term operation, the company needed its own products, so the technical cooperation between CHENTA and Japan reducer manufacturer began. From then on, CHENTA started manufacturing under proprietary, "CHENTA GEAR REDUCERS". Now the company has about 100 employees, and its products have been marketing to the world under the name of "CHENTA". The major markets are in Taiwan, Asia, and North America. In Taiwan, she remains at the top of the field and also established branch offices in America and in Shanghai (in China).

4. Since the beginning of the company, our conviction is to "Gather excellent human resource, and research and manufacture high quality products". Our product policy is targeting at "Guaranteed Quality", "On Time Delivery", "Competitive Prices", "Rational Production", and "International Marketing".

5. With more than 50 years of experience in mechanical manufacturing and honest operation, a fine culture has naturally grown inside the corporation. This spirit is the most precious resource of our company. The motto of our company is based on "INNOVATION", "HONESTY", "DILIGENCE", and "EFFICIENCY".

6. Influenced gradually under such fine culture, all employees in CHENTA work hard and take responsibility. They cooperate with each other and innovate actively. With their efforts, CHENTA keep developing and growing up to fight for the mutual benefits.

7. To reach our long term operation goal, based on the company's existing cultural resources, we will: have high expertise in the field; serve our customers with respect; constantly improve ourselves; manufacture high quality and affordable speed reducers for customers throughout the world, all so that we can grow together with our customers.

COMPANY PROFILE	Company Name: CHENTA PRECISION MACHINERY IND. INC. Established: 1971 Employee: 100 persons Plant Sizes: Jen Wu Plant: 7000m^2 Shanghai Plant: 6800m^2 Suzhou Plant: 30000M^2

1.2 In-line Helical Gear Reducers

Advantages

1>Design Concepts: The combination of standardization and modularization allows interchangeability with international leading brands, while keeping structure rigidity and compactness.

2>Energy Efficiency: Leveraging the advantage of high accuracy of helical gears, the reducers perform at 90% efficiency with higher stability and lower noise level.

3>Ratios Coverage: The ratio ranges between 1/1.3 ~ 1/27788, providing wide range of ratio accommodation, with 1-3 stages of reduction.

4>Loading Capacity: Available with power ranges from 1/4HP up to 150HP, depending on different requirements and applications.

5>Tensile Strength: Pinion and gears are made with 20CrMo alloy steel plus carburizing heat treatment to enhance performance; the input pinion is equipped with double bearing support to provide stability at high speed.

6>Complete Series: Vertical and horizontal mounting along various input mechanism ensure our products meet wide range of applications.

7>Installation Flexibility: All models are designed for a choice of mounting position (M1~M6) specified by customers.

8>Appearance Aesthetics: The reducers are designed with modern exterior while maintaining high rigidity.

1.3 Operation Manual

· This operation manual is to help you install and operate speed reducer correctly. To avoid damages to the speed reducers, proper installation and operation is very crucial. This manual also includes official recommendations on maintenance for an extended lifespan of speed reducers.

· Every CHENTA speed reducer passed strict inspection and testing before being properly packaged for shipping. Upon receipt of the speed reducer, please check for any shortage or damage of parts during transit. Please be sure to contact Chenta for identification of responsible carrier and made record of the issue. We are committed to excellence in quality and devoted to solving problems for our clients.

I. Installation

1. Flexible couplings are preferred when input shaft connects directly to the motor; gear couplings are preferred on the output shaft's connection to the application.
2. Install on a stable base with good air ventilation; the accessibility of oil filling / draining should be considered.
3. The input shaft of the reducer and the motor shaft should be in alignment within the tolerance allowance.
4. After installation, please turn the input shaft manually first to check for any locking.
5. No-load running test should be performed first; any abnormality should be corrected prior to regular operation.

II. Lubrication

1. The first oil change should be performed after 500 hrs of operation; subsequent oil change is needed every 2,500 hrs of operation. Nevertheless, a regular check on oil level and conditions are recommended.
2. Please fill only with compatible specifications of oil and do not mix oil of different specifications in a single unit.
3. The interior of the reducer should be flushed and drained before filling with fresh oil.
4. Please shut the reducer immediately for inspection if the temperature rises above 80°C or any abnormal noise occurred. Restart only after the issues identified and cleared.
5. Lubricant recommendation: MOBIL Gear 632, SHELL Omala 320, MOBIL Mobilube HD80W-90, SHELL Spirax E.P 90.
6. Unless specified otherwise by the customer, every CHENTA speed reducer is supplied with appropriate amount of lubrication according to different installation position before shipping. If customer prefers to fill in the lubricant oil post shipment, please follow the instruction section of this catalog.

III. Storage

1. If the speed reducer is not for immediate installation, please keep the unit away from humidity and heat sources. After extended period of storage, please contact our service personnel for instruction on restoring the original performance prior to installation.

IV. Attachments the parts on reducer's shaft

1. Notice: Avoid heavy impact on shafts! It may cause bearing damages and undermines bearing performances. If bearings are to be replaced, we recommend heating method, which heats the bearing above 80℃ , that would allow a clear fit on the shafts and reduce the damage to the bearing. For the tolerance of shaft's diameter, please refer to the specification in catalog.
2. While installing the coupling, make sure to check the alignment of coupling and shaft of speed reducer properly to eliminate the damage on bearings and reduce to vibration frequency and abnormal wear.
3. To avoid overload on the bearings of output shaft, please refer to the OHL (overhung loading) in catalog. For exceeding axial load, please contact our service engineer for consultation.
4. The actual application of following factors such as input and output speed, direction of rotation, installation site and over axial and radial loading should be carefully examined.

V. Installation & Operation

1. The underlying factors should be taken into consideration:
   * Ambient temperature below 40℃
   * Location with good air ventilation
   * Proper positions for oil plug and drain plug
   * Sufficient space for periodical inspection, maintenance, and replacement
2. It is necessary for the unit to be installed on a flat, stable and rigid base for accurate alignment to prevent damages to the reducer's housing.
3. The suggested tolerance of flatness on base:
   * For size 77 or smaller: < 0.1mm/m
   * For size 87 or bigger: < 0.2mm/m
4. To avoid the lubricant splash out during the transportation, breather plug with red pin inserted into air breathing hole. Please remove the red pin before start-up.
5. Before installation, please check the input horsepower and ratio to be the same as the punched name plate of reducer.

VI. Caution

Caution! The power should be turned off before removal or replacement of the reducer.

1. Oil level and quality lubricant is key point of daily maintenance. Please refer to our suggestion to change the lubricant periodically according to operation frequency site situation.
2. Check the alignment of coupling, the tightness of chain, and nuts and keep the reducer away from excessive dust and grease externally .

1.4 General Problems & Improvements

The following lists are general problem situations. In case that other problems happen, please contact us directly to get more information.

CAUSE	REASON	IMPROVEMENT
I. Overheat	1. Overload 2. Lubricant oil overfill or shortage 3. Improper lubricant oil 4. Extra friction on oil seal(lack of lubricant)	1. Adjust to proper loading 2. Add lubricant to the level of oil gauge 3. Chang proper lubricant oil 4. Lip lubricant at oil seal
II. Noise	1. Consistent noise { improper gears contact; bearing damaged 2. Screaming noise { bearing gap too small; lubricant oil shortage 3. Inconsistent noise { some object insert; bearing damaged	1. { Repair gears; Replace bearing 2. { Replace bearing; Fill in lubricant oil 3. { Remove debris & replace lubricant oil; Replace bearing
III. Vibration	1. Gear wear 2. Debris inside 3. Bearing worn-out or damaged 4. Bolt loose	1. Replace gear 2. Remove debris & replace lubricant oil 3. Replace bearing 4. Tighten bolt
IV. Oil Leakage	1. Oil seal damage 2. Gasket damage 3. Loose drain plug 4. Loose covers or flange	1. Replace oil seal 2. Replace gasket 3. Tighten drain plug 4. Tighten the bolts
V. Input and Output Shaft Fail	1. Gear-bound caused by overheat 2. Bearing damage 3. Debris between gears	1. Adjust or replace gears 2. Replace bearing 3. Remove debris; clean inside then replace lubricant oil
VI. Input shaft fail to drive output shaft	1. Gear wear 2. Damage to key connecting gear and output shaft 3. Input shaft rupture 4. Output shaft rupture	1. Replace gears 2. Replace key 3. Replace input shaft 4. Replace output shaft
VII. Gear Worn-out	1. Overload 2. Improper lubricant oil 3. Lubricant oil shortage 4. Excessive ambient temperature	1. Adjust to proper loading 2. Change proper lubricant oil 3. Refill lubricant oil 4. Ventilation improvement

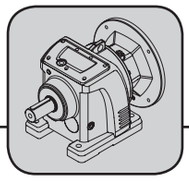

2.1 Variants

R...Couple with Motor

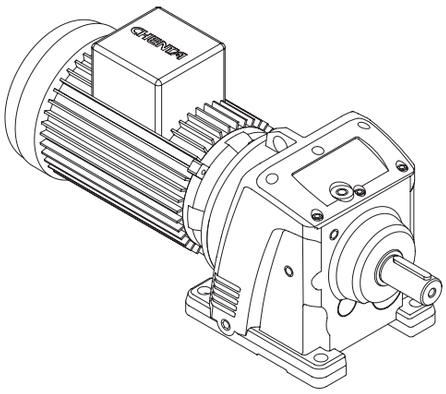

LHM...

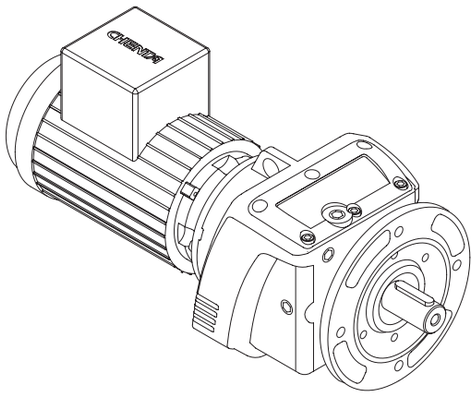

LVM...

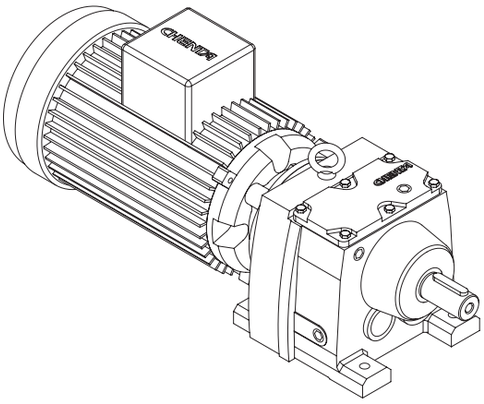

MHM...

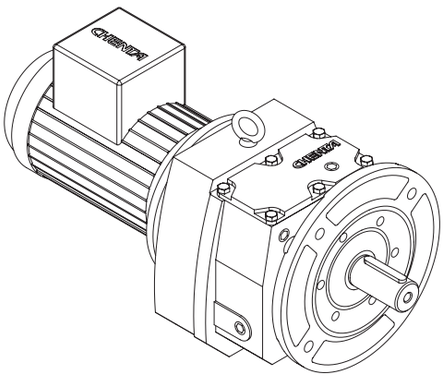

MVM...

R...Input Flange

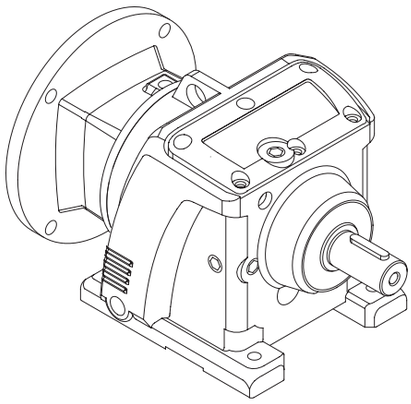

LHN...

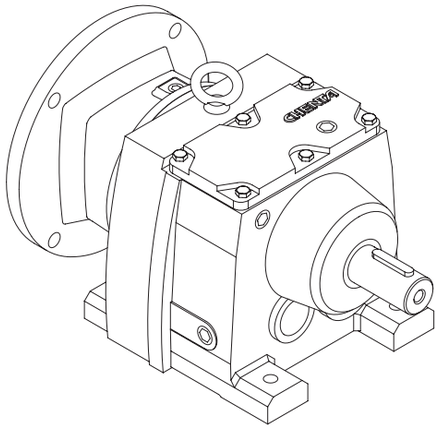

MHN...

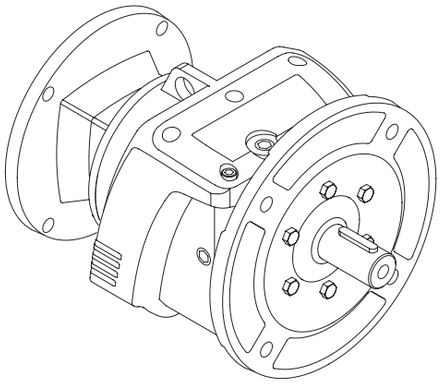

LVN...

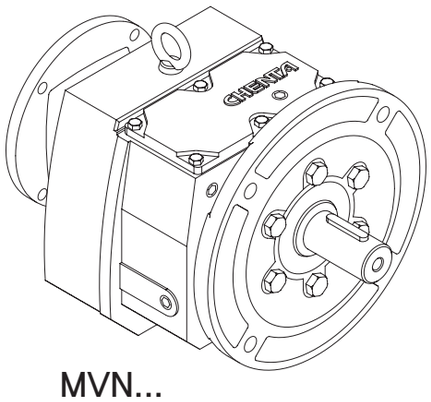

MVN...

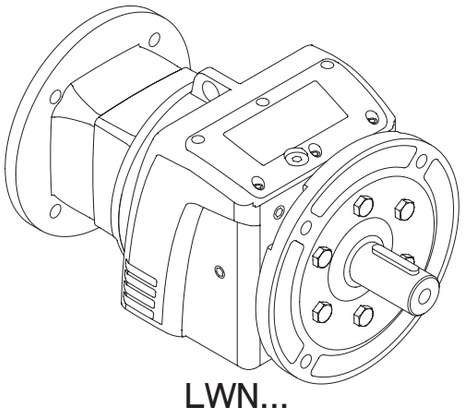

LWN...

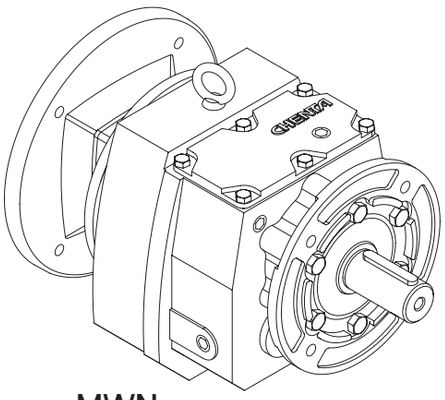

MWN...

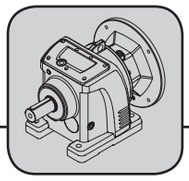

R...Solid Input Shaft

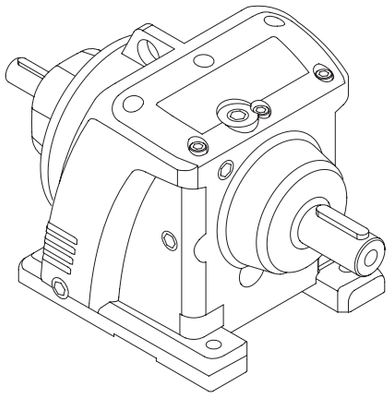

LHD...

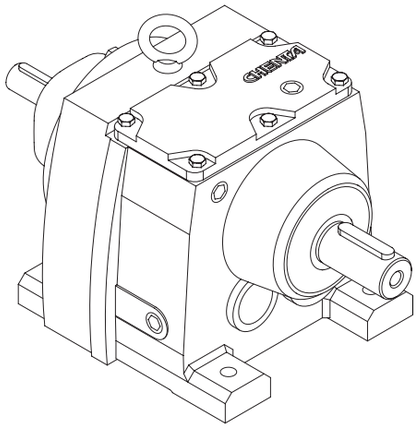

MHD...

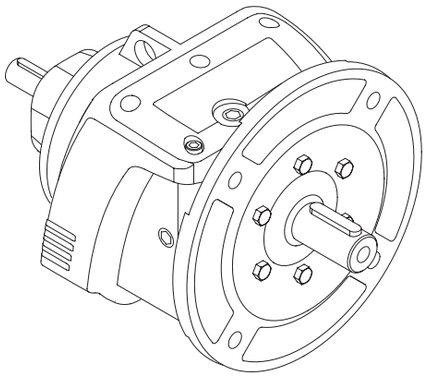

LVD...

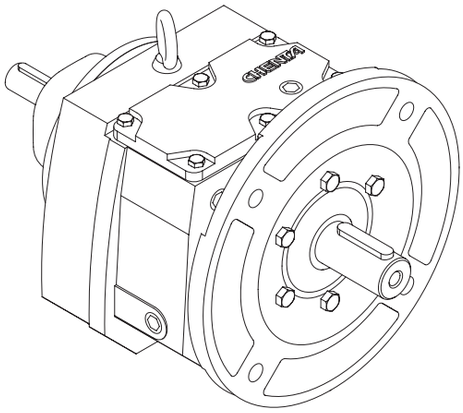

MVD...

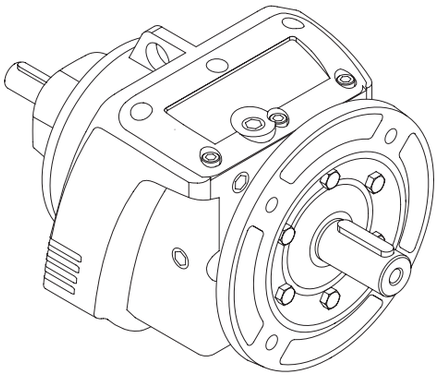

LWD...

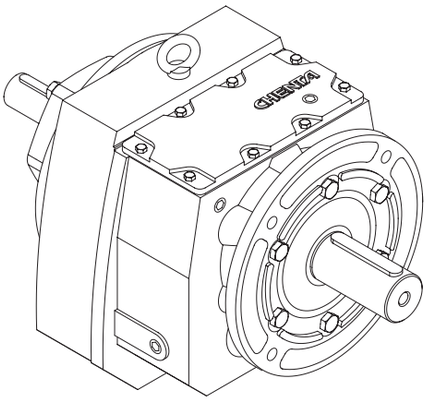

MWD...

RX...

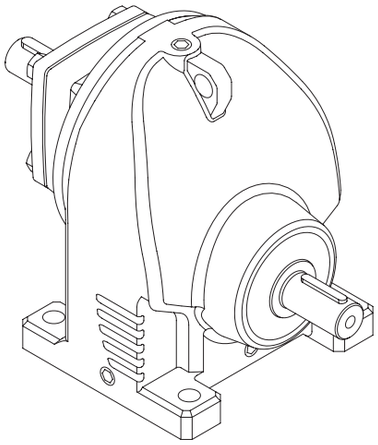

XHD...

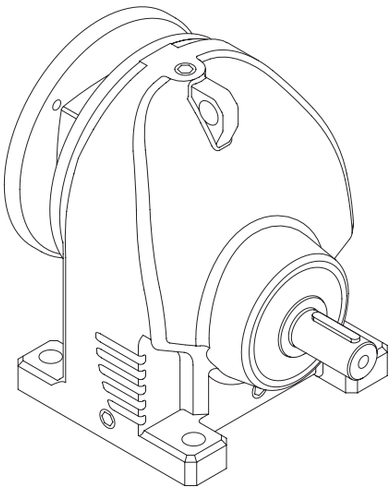

XHN ...

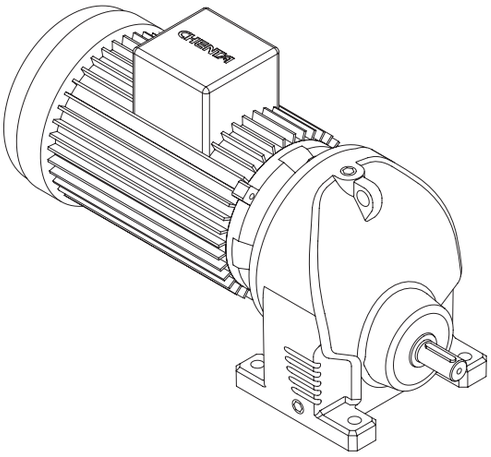

XHM...

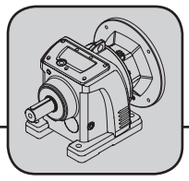

2.2 Order Code

Column only for Couple with Motor

L H M 097 199 03 1 L V 6 4 U

- Helical Gear
- Model
- Input Type
- Size
- Ratio
- Flange Frame/Input Shaft DIA
- Mounting Positions
- Paint
- Voltage
- Hz
- Pole
- Position of Terminal Box

Model

RX..

XH Foot Mounting

R...(37-97)

LH Foot Mounting

LV Flange Mounting

R...(17,107-167)

MH Foot Mounting

MV Flange Mounting

Input Type

F Input Flange IEC B5

B Input Flange IEC B14

N Input Flange NEMA

D Solid Input Shaft

M Couple With Motor

Size

017 : 17
037 : 37
047 : 47
057 : 57
067 : 67
077 : 77
087 : 87
097 : 97
107 : 107
137 : 137
147 : 147
167 : 167

Ratio

004 : 1/4
〜
201 : 1/201

Flange Frame/ Input Shaft DIA

IEC Standard 4-Pole	NEMA Standard	Input Shaft DIA
QQ : 1/4HP	01 : 56C	0.625
HH : 1/2HP	02 : 143T	0.750
01 : 1HP	04 : 182/184T	0.875
02 : 2HP	06 : 213/215T	1.125
03 : 3HP	08 : 254/256T	1.375
05 : 5HP	10 : 284/286T	1.625
07 : 7.5HP	12 : 324/326T	1.875
10 : 10HP	14 : 364/365T	2.125
15 : 15HP	16 : 404/405T	
20 : 20HP		

Mounting Positions

M1、M2、M3、M4、M5、M6

Paint

L : Gray

Voltage

2 : 220/380	C : 220/400	H : 200/346
4 : 240/415	D : 230/400	K : 208/220
5 : 220/440	E : 230/440	M : 208/240
A : 220/230	F : 240/480	N : 380/660
B : 220/240	G : 120/208	V : 208~480

Hz

5 : 50Hz
6 : 60Hz

Pole

2 : 2P
4 : 4P
6 : 6P
8 : 8P

Position of Terminal Box

U、D、L、R

2.3 Selection Table Example

Gear Unit Information

Available C-Face Adapters and Ratings

R37						AM56			AM143			AM145		
Ratio *i*	Output Speed n_a rpm	Iutput Power P_{emax} HP	Output Torque T_{amax} lb-in	Stages Pri.	Stages Sec.	Iutput Power P_e HP	Output Torque T_a lb-in	Output OHL F_{Ra} lb	Iutput Power P_e HP	Output Torque T_a lb-in	Output OHL F_{Ra} lb	Iutput Power P_e HP	Output Torque T_a lb-in	Output OHL F_{Ra} lb
138.36	13	0.39	1770	3	-	0.39	1770	1050						
119.28	15	0.45	1770	3	-	0.45	1770	1050						
100.51	17	0.54	1770	3	-	0.54	1770	1050						
91.53	19	0.63	1770	3	-	0.63	1770	1050						
79.77	22	0.68	1770	3	-	0.68	1770	1050						
76.66	23	0.71	1770	3	-	0.71	1770	1050						
69.81	25	0.78	1770	3	-	0.75	1731	1050						
60.84	29	0.89	1770	3	-	0.75	1509	1050						
54.03	32	1.00	1770	3	-	0.75	1340	1050	1	1787	1050			
52.24	33	1.04	1770	3	-	0.75	1296	1050	1	1727	1050			
44.01	40	1.23	1770	3	-	0.75	1091	1050	1	1455	1030			
40.08	44	1.35	1770	3	-	0.75	994	1020	1	1325	990			
34.93	50	1.55	1770	3	-	0.75	866	970	1	1155	950			
31.02	56	1.75	1770	3	-	0.75	769	940	1	1026	910			

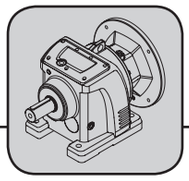

2.4 Determining the Service Factor

The service factor is determined along with the daily operating time (hours/day), operating condition (continuous or intermittent) and level of load; for a proper gear selection, please determine the service factor accordingly.

Ma × fs ≦ Mamax

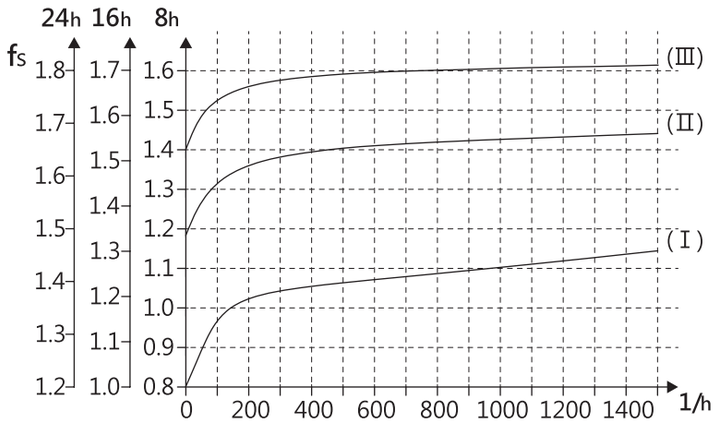

Service Factor

Load Classification

Ⅰ Light shocks：mass acceleration factor ≦ 0.2

Ⅱ Moderate shocks：mass acceleration factor ≦ 3

Ⅲ Heavy shocks：mass acceleration factor ≦ 10

$$\text{Mass acceleration factor} = \frac{\text{all exterior moments of inertia}}{\text{moments of inertia drive motors}}$$

[All exterior moments of inertia] - recalculated to motor speed, formula

$$J_X = J \times \left(\frac{n}{n_M}\right)^2$$

J_X : mass moment of inertia scaled down to the motor shaft

J : mass moment of inertia with reference to the output speed of the gear unit

n : output speed of the gear unit

n_M : motor speed

Calculation of service factor

$$fs = \frac{Mamax}{Ma}$$

Mamax：the maximum permitted continuous torque

Ma：output torque of the gear unit

EX

If the mass acceleration factor is 2.5 (Moderate shocks Ⅱ), the operating time is 14 hours per day in an intermittent condition by 300 times per hour. We can acquire fs=1.51 from the fs chart; according to selection tables, we will know to select the gear unit with fs ≧ 1.51.

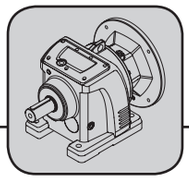

2.5 Tolerances

Shaft heights

D inch/mm	Tolerance inch/mm
≤9.84 / 250	+0→ -0.020 / +0→ -0.5
>9.84 / 250	+0→ -0.039 / +0→ -1.0

Shaft ends

Solid Shaft Diameter inch		Tolerance inch
over	to	
0.500	1.375	+0 / -0.0005
1.375	7.5	+0 / -0.0010

Output flanges

Diameter inch		Flange Centering Shoulder Dimension Tolerance inch
over	to	ISO h7
3.15	4.72	+0 / -0.0014
4.72	7.08	+0 / -0.0016
7.08	9.84	+0 / -0.0018
9.84	12.40	+0 / -0.0020
12.40	15.74	+0 / -0.0022
15.74	19.68	+0 / -0.0025
19.68	23.62	+0 / -0.0028

2.6 Mounting Positions

R....
LH.. 37-97
MH.. 17
MH.. 107-167

Position of Terminal Box
Standard position "U", unless specific requirements

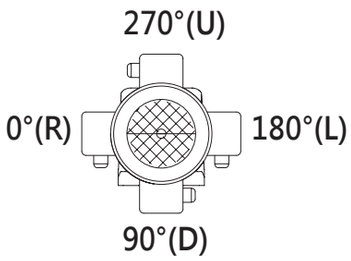

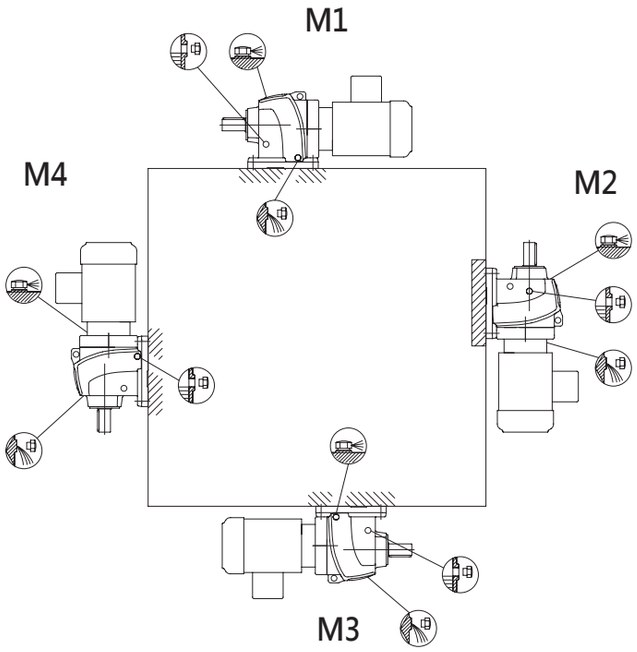

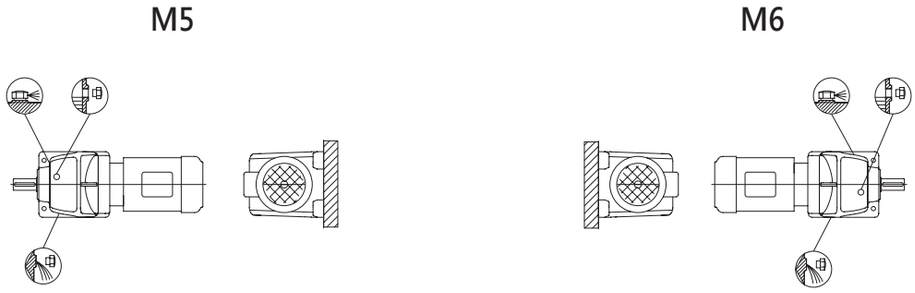

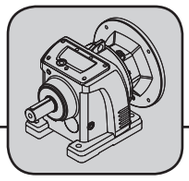

R....
LV../LW.. 37-97
MV.. 17
MV../MW.. 107-167

Position of Terminal Box

Standard position "U", unless specific requirements

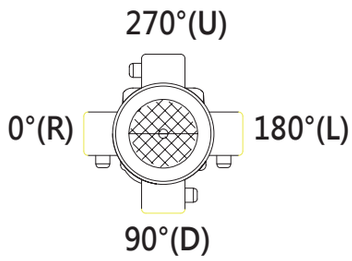

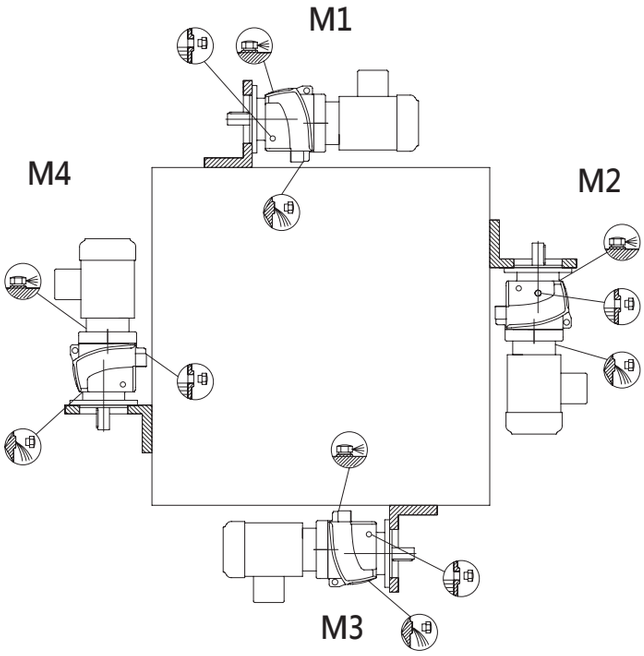

M5

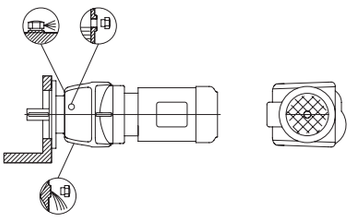

M6

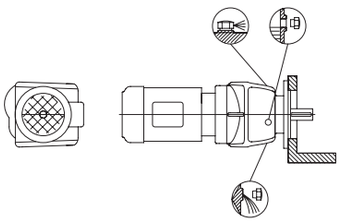

RX....
XH.. 57-107

Position of Terminal Box

Standard position "U", unless specific requirements

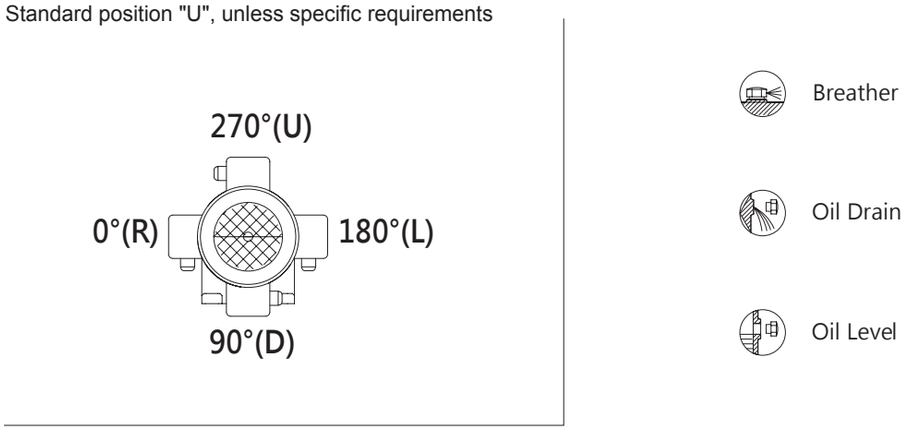

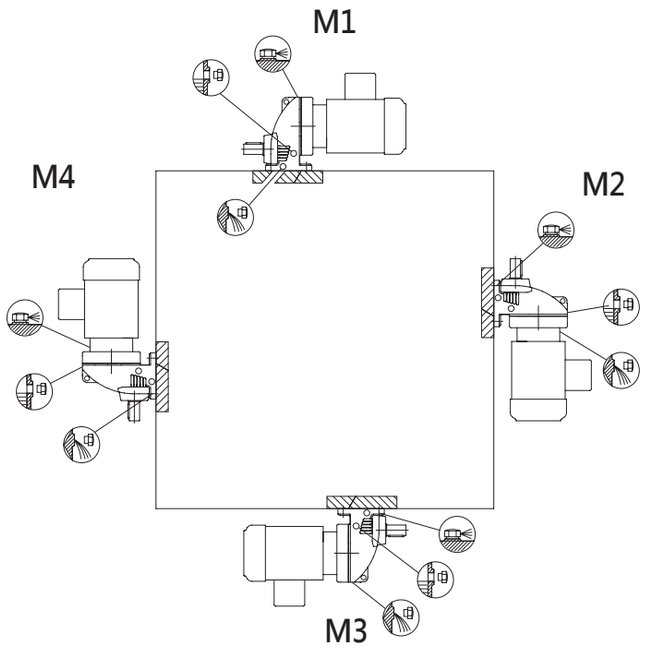

M5

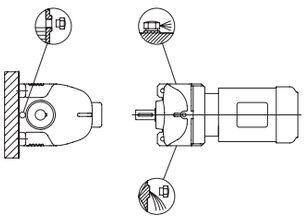

M6

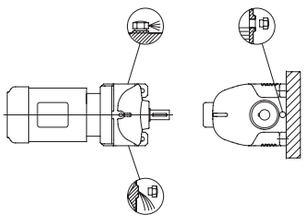

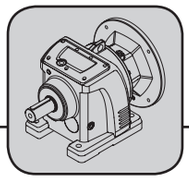

2.7 Lubricant Volume

In-Line Helical Gear units

R type: LHN, LHD, MHN, MHD

Gear units	Oil Volume (liters)					
	M1	M2	M3	M4	M5	M6
M..17	0.25	0.55	0.35	0.55	0.35	0.35
L..37	0.30	0.85	0.95	1.05	0.75	0.95
L..47	0.70	1.60	1.50	1.65	1.50	1.50
L..57	0.80	1.90	1.70	2.10	1.70	1.70
L..67	1.10	2.60	2.80	3.20	1.80	2.00
L..77	1.20	3.80	3.60	4.10	2.50	3.40
L..87	2.30	6.70	7.20	7.70	6.30	6.50
L..97	4.60	11.70	11.70	13.40	11.30	11.70
M..107	6.00	16.30	16.90	19.20	13.20	15.90
M..137	10.00	28.00	29.50	31.50	25.00	25.00
M..147	15.40	46.50	48.00	52.00	39.50	41.00
M..167	27.00	82.00	78.00	88.00	66.00	69.00

R type: LVN, LVD, LWN, LWD, MVN, MVD, MWN, MWD

Gear units	Oil Volume (liters)					
	M1	M2	M3	M4	M5	M6
M..17	0.25	0.55	0.35	0.55	0.35	0.35
L..37	0.35	0.90	0.20	1.05	0.75	0.95
L..47	0.65	1.60	1.50	1.65	1.50	1.50
L..57	0.80	1.80	1.70	2.00	1.70	1.70
L..67	1.20	2.70	2.70	2.60	1.90	2.10
L..77	1.20	3.80	3.30	4.10	2.40	3.00
L..87	2.40	6.80	7.10	7.70	6.30	6.40
L..97	5.10	11.90	11.20	14.00	11.20	11.80
M..107	6.30	15.90	17.00	19.20	13.10	15.90
M..137	9.50	27.00	29.00	32.50	25.00	25.00
M..147	16.40	47.00	48.00	52.00	42.00	42.00
M..167	26.00	82.00	78.00	88.00	65.00	71.00

RX type: XHN, XHD

Gear units	Oil Volume (liters)					
	M1	M2	M3	M4	M5	M6
X..57	0.60	0.80	1.30	1.30	0.90	0.90
X..67	0.80	0.80	1.70	1.90	1.10	1.10
X..77	1.10	1.50	2.60	2.70	1.60	1.60
X..87	1.70	2.50	4.80	4.80	2.90	2.90
X..97	2.10	3.40	7.40	7.00	4.80	4.80
X..107	3.90	5.60	11.60	11.90	7.70	7.70

* Recommandations

3.1 Selection Tables: R17~R167

R17						AM56			AM56			AM56		
Ratio *i*	Output Speed n_a rpm	Input Power P_{emax} HP	Output Torque T_{amax} lb-in	Stages Pri.	Stages Sec.	Input Power P_e HP	Output Torque T_a lb-in	Output OHL F_{Ra} lb	Input Power P_e HP	Output Torque T_a lb-in	Output OHL F_{Ra} lb	Input Power P_e HP	Output Torque T_a lb-in	Output OHL F_{Ra} lb
79.85	22	0.29	755	3	-	0.29	755	395						
68.73	25	0.34	755	3	-	0.34	755	395						
59.23	30	0.39	755	3	-	0.39	755	395						
49.90	35	0.46	755	3	-	0.46	755	395						
45.45	39	0.51	755	3	-	0.5	740	395						
39.61	44	0.58	755	3	-	0.5	645	395						
35.17	50	0.66	755	3	-	0.5	575	395						
29.36	60	0.79	755	3	-	0.5	480	395	0.75	720	345			
24.76	71	0.93	755	3	-	0.5	405	395	0.75	605	350			
19.69	89	1.17	755	3	-	0.5	320	395	0.75	480	345	1	645	295
15.02	117	1.25	635	2	-	0.5	255	375	0.75	380	335	1	505	295
12.65	138	1.39	590	2	-	0.5	215	360	0.75	320	325	1	425	295
10.04	174	1.60	540	2	-	0.5	170	340	0.75	255	315	1	340	290
7.44	235	1.92	480	2	-	0.5	125	320	0.75	190	300	1	250	280
4.99	351	2.45	410	2	-	0.5	85	285	0.75	125	275	1	170	260
4.05	432	2.78	380	2	-	0.5	70	270	0.75	100	260	1	135	250

Standard Contact with sales office Not available

3

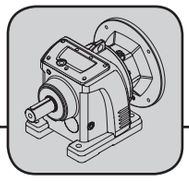

1750 Input Rpm

R37						AM56			AM143			AM145		
Ratio *i*	Output Speed n_a rpm	Input Power P_{emax} HP	Output Torque T_{amax} lb-in	Stages Pri.	Stages Sec.	Input Power P_e HP	Output Torque T_a lb-in	Output OHL F_{Ra} lb	Input Power P_e HP	Output Torque T_a lb-in	Output OHL F_{Ra} lb	Input Power P_e HP	Output Torque T_a lb-in	Output OHL F_{Ra} lb
138.36	13	0.39	1770	3	-	0.39	1770	1110						
119.28	15	0.45	1770	3	-	0.45	1770	1110						
100.51	17	0.54	1770	3	-	0.54	1770	1110						
91.53	19	0.59	1770	3	-	0.59	1770	1070						
79.77	22	0.68	1770	3	-	0.68	1770	1010						
76.66	23	0.71	1770	3	-	0.71	1770	990						
69.81	25	0.78	1770	3	-	0.75	1710	960						
60.84	29	0.89	1770	3	-	0.75	1490	940						
54.03	32	1.00	1770	3	-	0.75	1320	920	1	1760	860			
52.24	33	1.04	1770	3	-	0.75	1280	900	1	1710	840			
44.01	40	1.23	1770	3	-	0.75	1080	860	1	1440	810			
40.08	44	1.35	1770	3	-	0.75	980	850	1	1310	800			
34.93	50	1.55	1770	3	-	0.75	860	820	1	1140	780			
31.02	56	1.75	1770	3	-	0.75	760	795	1	1010	760			
25.89	68	2.00	1690	3	-	0.75	630	760	1	850	730			
24.50	71	2.11	1740	2	-	0.75	620	755	1	820	730			
22.09	79	2.29	1710	2	-	0.75	560	735	1	740	710			
19.95	88	2.49	1670	2	-	0.75	500	715	1	670	690			
17.89	98	2.74	1650	2	-	0.75	450	690	1	600	675			
15.75	111	2.99	1580	2	-	0.75	400	670	1	530	650	2	1060	585
13.07	134	3.38	1490	2	-	0.75	330	635	1	440	620	2	880	565
11.73	149	3.63	1430	2	-	0.75	300	615	1	400	600	2	790	550
10.02	175	4.04	1360	2	-	0.75	250	585	1	340	575	2	670	530
8.50	206	4.50	1290	2	-	0.75	210	560	1	290	550	2	570	510
6.74	260	4.77	1080	2	-	0.75	170	520	1	230	510	2	450	480
5.75	304	5.29	1030	2	-	0.75	150	495	1	190	485	2	390	460
4.88	359	5.91	970	2	-	0.75	120	470	1	160	465	2	330	440
4.00	438	6.75	910	2	-	0.75	100	440	1	130	435	2	270	420

Standard Contact with sales office Not available

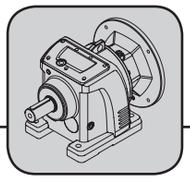

R47						AM56			AM143			AM145		
Ratio *i*	Output Speed n_a rpm	Input Power P_{emax} HP	Output Torque T_{amax} lb-in	Stages Pri.	Stages Sec.	Input Power P_e HP	Output Torque T_a lb-in	Output OHL F_{Ra} lb	Input Power P_e HP	Output Torque T_a lb-in	Output OHL F_{Ra} lb	Input Power P_e HP	Output Torque T_a lb-in	Output OHL F_{Ra} lb
178.83	10	0.45	2660	3	-	0.45	2660	1215						
160.40	11	0.51	2660	3	-	0.51	2660	1215						
138.19	13	0.59	2660	3	-	0.59	2660	1215						
126.22	14	0.64	2660	3	-	0.64	2660	1215						
110.34	16	0.74	2660	3	-	0.74	2660	1215						
99.46	18	0.82	2660	3	-	0.75	2440	1215						
89.82	19	0.91	2660	3	-	0.75	2200	1215						
80.58	22	1.01	2660	3	-	0.75	1970	1215	1	2630	1215			
77.84	22	1.05	2660	3	-	0.75	1910	1215	1	2540	1215			
70.91	25	1.15	2660	3	-	0.75	1740	1215	1	2320	1215			
63.37	28	1.28	2660	3	-	0.75	1550	1215	1	2070	1215			
58.84	30	1.38	2660	3	-	0.75	1440	1215	1	1920	1215			
52.84	33	1.54	2660	3	-	0.75	1290	1215	1	1730	1215			
45.13	39	1.80	2660	3	-	0.75	1110	1215	1	1470	1215			
41.51	42	1.96	2660	3	-	0.75	1020	1215	1	1360	1215			
37.28	47	2.18	2660	3	-	0.75	910	1215	1	1220	1215	2	2430	1145
31.83	55	2.56	2660	3	-	0.75	780	1215	1	1040	1195	2	2080	1070
27.19	64	2.99	2660	3	-	0.75	670	1175	1	890	1150	2	1780	1040
25.01	70	3.25	2660	3	-	0.75	610	1145	1	820	1120	2	1630	1020
22.46	78	3.62	2660	3	-	0.75	550	1110	1	730	1090	2	1470	1000
24.70	71	3.20	2660	2	-	0.75	620	1155	1	830	1130			
23.02	76	3.43	2660	2	-	0.75	580	1130	1	770	1110			
20.49	85	3.85	2660	2	-	0.75	520	1090	1	690	1075			
18.37	95	4.30	2660	2	-	0.75	460	1055	1	620	1040	2	1240	975
15.18	115	5.20	2660	2	-	0.75	380	995	1	510	985	2	1020	930
11.27	155	6.68	2530	2	-	0.75	280	910	1	380	900	2	760	860
8.06	217	8.35	2260	2	-							2	540	780
6.79	258	8.26	1890	2	-	0.75	170	770	1	230	765	2	460	735
4.85	361	10.32	1690	2	-							2	330	670
3.99	439	11.76	1580	2	-							2	270	630

R47						AM182			AM184		
Ratio *i*	Output Speed n_a rpm	Input Power P_{emax} HP	Output Torque T_{amax} lb-in	Stages Pri.	Stages Sec.	Input Power P_e HP	Output Torque T_a lb-in	Output OHL F_{Ra} lb	Input Power P_e HP	Output Torque T_a lb-in	Output OHL F_{Ra} lb
22.46	78	3.62	2660	3	-	3	2200	905			
11.27	155	6.68	2530	2	-	3	1140	820	5	1900	740
8.06	217	8.35	2260	2	-	3	810	755	5	1360	700
6.79	258	8.26	1890	2	-	3	690	705	5	1140	650
4.85	361	10.32	1690	2	-	3	490	645	5	820	605
3.99	439	11.76	1580	2	-	3	400	615	5	670	580

Standard Contact with sales office Not available

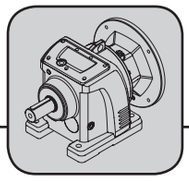

1750 Input Rpm

R57						AM56			AM143			AM145		
Ratio *i*	Output Speed n_a rpm	Input Power P_{emax} HP	Output Torque T_{amax} lb-in	Stages Pri.	Stages Sec.	Input Power P_e HP	Output Torque T_a lb-in	Output OHL F_{Ra} lb	Input Power P_e HP	Output Torque T_a lb-in	Output OHL F_{Ra} lb	Input Power P_e HP	Output Torque T_a lb-in	Output OHL F_{Ra} lb
182.99	10	0.67	3990	3	-	0.67	3990	1600						
164.13	11	0.74	3990	3	-	0.74	3990	1600						
141.40	12	0.86	3990	3	-	0.75	3460	1600						
129.16	14	0.94	3990	3	-	0.75	3160	1600						
112.90	16	1.08	3990	3	-	0.75	2770	1600	1	3690	1600			
101.77	17	1.20	3990	3	-	0.75	2490	1600	1	3320	1600			
91.91	19	1.33	3990	3	-	0.75	2250	1600	1	3000	1580			
82.45	21	1.48	3990	3	-	0.75	2020	1600	1	2690	1550			
79.65	22	1.53	3990	3	-	0.75	1950	1600	1	2600	1530			
72.56	24	1.68	3990	3	-	0.75	1780	1560	1	2370	1500			
64.84	27	1.88	3990	3	-	0.75	1590	1520	1	2120	1460			
60.21	29	2.03	3990	3	-	0.75	1470	1490	1	1970	1440	2	3930	1240
54.07	32	2.26	3990	3	-	0.75	1320	1450	1	1770	1400	2	3530	1220
46.18	38	2.64	3990	3	-	0.75	1130	1390	1	1510	1350	2	3020	1190
42.48	41	2.87	3990	3	-	0.75	1040	1350	1	1390	1320	2	2770	1180
38.14	46	3.20	3990	3	-	0.75	930	1310	1	1250	1280	2	2490	1150
32.33	54	3.67	3880	3	-	0.75	790	1240	1	1060	1200	2	2110	1070
27.61	63	4.08	3680	3	-	0.75	680	1180	1	900	1150	2	1800	1040
25.40	69	4.32	3580	3	-	0.75	620	1150	1	830	1130	2	1660	1030
22.81	77	4.64	3450	3	-	0.75	560	1120	1	740	1090	2	1490	1000
25.27	69	3.29	2800	2	-	0.75	640	1160	1	850	1140			
23.55	74	3.45	2740	2	-	0.75	590	1140	1	790	1120			
20.96	83	3.73	2630	2	-	0.75	530	1100	1	710	1080			
18.80	93	4.01	2540	2	-	0.75	470	1060	1	630	1050	2	1270	980
15.53	113	4.56	2380	2	-	0.75	390	1000	1	520	990	2	1050	940
11.53	152	5.56	2160	2	-	0.75	290	920	1	390	910	2	780	870
8.24	212	6.95	1930	2	-							2	560	790
6.89	254	7.13	1660	2	-	0.75	170	775	1	230	770	2	460	740
4.93	355	8.92	1480	2	-							2	330	670
4.06	431	10.16	1390	2	-							2	270	635

R57						AM182			AM184		
Ratio *i*	Output Speed n_a rpm	Input Power P_{emax} HP	Output Torque T_{amax} lb-in	Stages Pri.	Stages Sec.	Input Power P_e HP	Output Torque T_a lb-in	Output OHL F_{Ra} lb	Input Power P_e HP	Output Torque T_a lb-in	Output OHL F_{Ra} lb
38.14	46	3.20	3990	3	-	3	3740	1030			
32.33	54	3.67	3880	3	-	3	3170	940			
27.61	63	4.08	3680	3	-	3	2710	930			
22.81	77	4.64	3450	3	-	3	2230	910			
11.53	152	5.56	2160	2	-	3	1160	830			
8.24	212	6.95	1930	2	-	3	830	760	5	1390	705
6.89	254	7.13	1660	2	-	3	700	710	5	1160	655
4.93	355	8.92	1480	2		3	500	650	5	830	610
4.06	431	10.16	1390	2		3	410	615	5	680	585

Standard Contact with sales office Not available

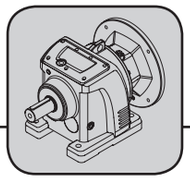

R67						AM56			AM143			AM145		
Ratio *i*	Output Speed n_a rpm	Input Power P_{emax} HP	Output Torque T_{amax} lb-in	Stages Pri.	Stages Sec.	Input Power P_e HP	Output Torque T_a lb-in	Output OHL F_{Ra} lb	Input Power P_e HP	Output Torque T_a lb-in	Output OHL F_{Ra} lb	Input Power P_e HP	Output Torque T_a lb-in	Output OHL F_{Ra} lb
199.88	9	0.81	5310	3	-	0.75	4900	1700						
169.10	10	0.96	5310	3	-	0.75	4140	1700						
151.03	12	1.08	5310	3	-	0.75	3700	1700	1	4930	1700			
140.75	12	1.16	5310	3	-	0.75	3450	1700	1	4600	1700			
125.28	14	1.30	5310	3	-	0.75	3070	1700	1	4090	1700			
112.34	16	1.45	5310	3	-	0.75	2750	1700	1	3670	1700			
98.69	18	1.65	5310	3	-	0.75	2420	1700	1	3220	1700			
92.80	19	1.75	5310	3	-	0.75	2270	1700	1	3030	1700			
78.59	22	2.07	5310	3	-	0.75	1930	1700	1	2570	1700			
68.90	25	2.36	5310	3	-	0.75	1690	1700	1	2250	1700	2	4500	1490
63.07	28	2.58	5310	3	-	0.75	1540	1690	1	2060	1630			
58.23	30	2.79	5310	3	-	0.75	1430	1670	1	1900	1630			
52.21	34	3.12	5310	3	-	0.75	1280	1620	1	1710	1580	2	3410	1430
45.87	38	3.55	5310	3	-	0.75	1120	1560	1	1500	1530	2	3000	1390
41.22	42	3.29	4430	3	-	0.75	1010	1500	1	1350	1460	2	2690	1320
38.75	45	3.43	4340	3	-	0.75	950	1470	1	1270	1440	2	2530	1300
32.02	55	4.71	4930	3	-	0.75	780	1410	1	1050	1380	2	2090	1290
28.77	61	4.19	3930	3	-	0.75	700	1350	1	940	1320	2	1880	1220
22.90	76	5.89	4410	3	-				1	750	1250	2	1500	1180
24.14	72	5.52	4480	2	-	0.75	610	1290	1	810	1270			
21.33	82	5.99	4300	2	-	0.75	540	1240	1	720	1230	2	1440	1160
18.79	93	6.52	4130	2	-	0.75	470	1190	1	630	1180	2	1270	1120
15.41	114	7.44	3860	2	-	0.75	390	1120	1	520	1110	2	1040	1060
12.53	140	8.54	3600	2	-				1	420	1040	2	840	1000
9.90	177	9.99	3330	2	-				1	330	970	2	670	940
6.06	289	11.47	2340	2	-	0.75	150	830	1	200	825	2	410	805
5.23	335	12.65	2230	2	-				1	180	790	2	350	770
4.14	423	14.79	2060	2	-				1	140	730	2	280	715

R67						AM182			AM184		
Ratio *i*	Output Speed n_a rpm	Input Power P_{emax} HP	Output Torque T_{amax} lb-in	Stages Pri.	Stages Sec.	Input Power P_e HP	Output Torque T_a lb-in	Output OHL F_{Ra} lb	Input Power P_e HP	Output Torque T_a lb-in	Output OHL F_{Ra} lb
45.87	38	3.55	5310	3	-	3	4490	1250			
41.22	42	3.29	4430	3	-	3	4040	1170			
32.02	55	4.71	4930	3	-	3	3140	1190			
28.77	61	4.19	3930	3	-	3	2820	1120			
22.90	76	5.89	4410	3	-	3	2240	1120	5	3740	980
18.79	93	6.52	4130	2	-	3	1900	1060			
15.41	114	7.44	3860	2	-	3	1560	1020			
12.53	140	8.54	3600	2	-	3	1270	960	5	2110	890
9.90	177	9.99	3330	2	-	3	1000	910	5	1670	845
6.06	289	11.47	2340	2	-	3	610	780	5	1020	740
5.23	335	12.65	2230	2	-	3	530	750	5	880	710
4.14	423	18.00	2505	2	-	3	420	700	5	700	670

Standard Contact with sales office Not available

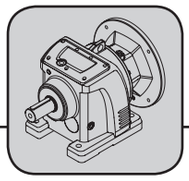

1750 Input Rpm

R77						AM56			AM143			AM145		
Ratio *i*	Output Speed n_a rpm	Input Power P_{emax} HP	Output Torque T_{amax} lb-in	Stages Pri.	Stages Sec.	Input Power P_e HP	Output Torque T_a lb-in	Output OHL F_{Ra} lb	Input Power P_e HP	Output Torque T_a lb-in	Output OHL F_{Ra} lb	Input Power P_e HP	Output Torque T_a lb-in	Output OHL F_{Ra} lb
194.80	9	1.04	6640	3	-	0.75	4770	1940	1	6360	1940			
170.05	10	1.20	6640	3	-	0.75	4170	1940	1	5550	1940			
153.87	11	1.32	6640	3	-	0.75	3770	1940	1	5030	1940			
140.70	12	1.45	6640	3	-	0.75	3450	1940	1	4600	1940			
124.34	14	1.64	6640	3	-	0.75	3050	1940	1	4060	1940			
109.54	16	1.86	6640	3	-	0.75	2680	1940	1	3580	1940			
89.80	19	2.26	6640	3	-	0.75	2200	1940	1	2930	1940	2	5870	1870
84.62	21	2.40	6640	3	-	0.75	2070	1940	1	2760	1940	2	5530	1850
73.05	24	2.78	6640	3	-							2	4770	1800
57.73	30	3.52	6640	3	-							2	3770	1710
53.24	33	3.82	6640	3	-	0.75	1300	1850	1	1740	1820	2	3480	1680
46.90	37	4.34	6640	3	-							2	3060	1630
39.31	45	5.17	6640	3	-							2	2570	1530
36.23	48	5.49	6640	3	-							2	2420	1510
31.97	55	6.36	6640	3	-									
25.27	69	8.05	6640	3	-									
23.31	75	7.84	6150	2	-							2	1570	1360
18.08	97	10.10	6150	2	-							2	1220	1270
14.83	118	12.35	6170	2	-									
13.21	132	13.90	6180	2	-									
11.85	148	15.53	6200	2	-									
10.91	160	16.89	6210	2	-									
9.21	190	19.44	6030	2	-									
5.78	303	22.12	4310	2	-									
4.78	366	25.13	4040	2	-									
4.03	434	28.14	3820	2	-									

R77						AM182			AM184			AM213		
Ratio *i*	Output Speed n_a rpm	Input Power P_{emax} HP	Output Torque T_{amax} lb-in	Stages Pri.	Stages Sec.	Input Power P_e HP	Output Torque T_a lb-in	Output OHL F_{Ra} lb	Input Power P_e HP	Output Torque T_a lb-in	Output OHL F_{Ra} lb	Input Power P_e HP	Output Torque T_a lb-in	Output OHL F_{Ra} lb
57.73	30	3.52	6640	3	-	3	5660	1560						
46.90	37	4.34	6640	3	-	3	4600	1510						
39.31	45	5.17	6640	3	-	3	3850	1420						
36.23	48	5.49	6640	3	-	3	3630	1400	5	6050	1190			
31.97	55	6.36	6640	3	-	3	3130	1370	5	5220	1180			
25.27	69	8.05	6640	3	-	3	2480	1300	5	4130	1150	7.5	6190	970
23.31	75	7.84	6150	2	-	3	2350	1300						
18.08	97	10.10	6150	2	-	3	1830	1220						
14.83	118	12.35	6170	2	-	3	1500	1160	5	2500	1080	7.5	3750	980
13.21	132	13.90	6180	2	-	3	1330	1120	5	2220	1050	7.5	3340	970
11.85	148	15.53	6200	2	-				5	1990	1030	7.5	2990	950
10.91	160	16.89	6210	2	-				5	1840	1010	7.5	2760	935
9.21	190	19.44	6030	2	-				5	1550	965	7.5	2320	905
5.78	303	22.12	4310	2	-				5	970	845	7.5	1460	800
4.78	366	25.13	4040	2	-				5	800	800	7.5	1210	765
4.03	434	28.14	3820	2	-				5	680	765	7.5	1020	735

Standard Contact with sales office Not available

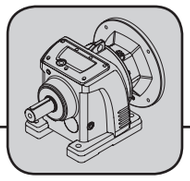

R87						AM56			AM143			AM145			AM182		
Ratio *i*	Output Speed n_a rpm	Input Power P_{emax} HP	Output Torque T_{amax} lb-in	Stages Pri.	Stages Sec.	Input Power P_e HP	Output Torque T_a lb-in	Output OHL F_{Ra} lb	Input Power P_e HP	Output Torque T_a lb-in	Output OHL F_{Ra} lb	Input Power P_e HP	Output Torque T_a lb-in	Output OHL F_{Ra} lb	Input Power P_e HP	Output Torque T_a lb-in	Output OHL F_{Ra} lb
201.38	9	2.09	13700	3	-	0.75	4930	3790	1	6580	3790						
179.70	10	2.34	13700	3	-	0.75	4400	3790	1	5870	3790						
161.11	11	2.61	13700	3	-	0.75	3950	3790	1	5260	3790						
137.42	13	3.06	13700	3	-	0.75	3370	3790	1	4490	3790						
122.17	14	3.44	13700	3	-	0.75	2990	3790	1	3990	3790	2	7980	3790			
112.52	16	3.74	13700	3	-				1	3670	3790	2	7350	3790	3	11000	3790
87.27	20	4.82	13700	3	-				1	2850	3790	2	5700	3790	3	8550	3790
71.60	24	5.63	13200	3	-										3	7020	3790
63.77	27	6.08	12700	3	-										3	6250	3790
61.54	28	6.22	12500	3	-										3	6030	3790
54.81	32	6.72	12000	3	-										3	5370	3790
49.16	36	7.23	11600	3	-												
45.27	39	7.64	11300	3	-												
38.20	46	8.55	10700	3	-												
31.73	55	8.12	8410	3	-												
24.29	72	9.70	7700	3	-												
20.06	87	11.02	7220	3	-												
22.83	77	11.70	8990	2	-										3	2310	3080
19.83	88	12.84	8580	2	-										3	2000	2950
17.51	100	13.96	8230	2	-										3	1770	2840
15.29	114	15.28	7860	2	-												
12.98	135	17.04	7450	2	-												
11.33	154	18.65	7120	2	-												
10.66	164	19.43	6970	2	-												
9.15	191	21.51	6630	2	-												
6.78	258	22.04	5030	2	-												
5.75	304	24.58	4760	2	-												
4.73	370	28.03	4460	2	-												
4.06	431	31.03	4240	2	-												

R87						AM184			AM213			AM215			AM254		
Ratio *i*	Output Speed n_a rpm	Input Power P_{emax} HP	Output Torque T_{amax} lb-in	Stages Pri.	Stages Sec.	Input Power P_e HP	Output Torque T_a lb-in	Output OHL F_{Ra} lb	Input Power P_e HP	Output Torque T_a lb-in	Output OHL F_{Ra} lb	Input Power P_e HP	Output Torque T_a lb-in	Output OHL F_{Ra} lb	Input Power P_e HP	Output Torque T_a lb-in	Output OHL F_{Ra} lb
71.60	24	5.63	13200	3	-	5	11700	3790									
63.77	27	6.08	12700	3	-	5	10400	3790									
61.54	28	6.22	12500	3	-	5	10100	3790									
54.81	32	6.72	12000	3	-	5	8950	3720	7.5	13400	3420						
49.16	36	7.23	11600	3	-	5	8030	3630	7.5	12000	3360						
45.27	39	7.64	11300	3	-	5	7390	3560	7.5	11100	3310						
38.20	46	8.55	10700	3	-	5	6240	3420	7.5	9360	3200	10	12500	2990			
31.73	55	8.12	8410	3	-	5	5180	3200	7.5	7770	3000	10	10400	2790			
24.29	72	9.70	7700	3	-	5	3970	2990	7.5	5950	2830	10	7930	2680			
20.06	87	11.02	7220	3	-	5	3280	2840	7.5	4910	2710	10	6550	2580	15	9830	2320
19.83	88	12.84	8580	2	-	5	3340	2860	7.5	5010	2740	10	6680	2630			
17.51	100	13.96	8230	2	-	5	2950	2760	7.5	4420	2660	10	5900	2560			
15.29	114	15.28	7860	2	-	5	2570	2650	7.5	3860	2570	10	5150	2480	15	7720	2300
12.98	135	17.04	7450	2	-	5	2190	2530	7.5	3280	2460	10	4370	2380	15	6560	2230
11.33	154	18.65	7120	2	-	5	1910	2430	7.5	2860	2370	10	3820	2300	15	5720	2170
10.66	164	19.43	6970	2	-	5	1800	2390	7.5	2690	2330	10	3590	2260	15	5390	2140
9.15	191	21.51	6630	2	-	5	1540	2280	7.5	2310	2230	10	3080	2170	15	4620	2070
6.78	258	22.04	5030	2	-	5	1140	2070	7.5	1710	2020	10	2280	1980	15	3420	1890
5.75	304	24.58	4760	2	-	5	970	1970	7.5	1450	1930	10	1940	1890	15	2910	1810
4.73	370	28.03	4460	2	-	5	800	1850	7.5	1190	1820	10	1590	1790	15	2390	1730
4.06	431	31.03	4240	2	-	5	680	1760	7.5	1020	1740	10	1370	1710	15	2050	1660

Standard Contact with sales office Not available

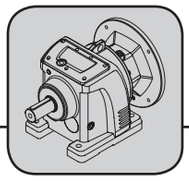

1750 Input Rpm

R97						AM182			AM184			AM213			AM215		
Ratio *i*	Output Speed n_a rpm	Input Power P_{emax} HP	Output Torque T_{amax} lb-in	Stages Pri.	Stages Sec.	Input Power P_e HP	Output Torque T_a lb-in	Output OHL F_{Ra} lb	Input Power P_e HP	Output Torque T_a lb-in	Output OHL F_{Ra} lb	Input Power P_e HP	Output Torque T_a lb-in	Output OHL F_{Ra} lb	Input Power P_e HP	Output Torque T_a lb-in	Output OHL F_{Ra} lb
199.06	9	4.09	26600	3	-	3	19500	4060									
181.06	10	4.49	26600	3	-	3	17700	4060									
166.33	11	4.89	26600	3	-	3	16300	4060									
144.53	12	5.63	26600	3	-	3	14200	4060	5	23600	4060						
127.61	14	6.38	26600	3	-	3	12500	4060	5	20800	4060						
111.42	16	7.30	26600	3	-				5	18200	4060						
97.76	18	8.32	26600	3	-				5	16000	4060	7.5	23900	4060			
94.59	19	8.60	26600	3	-				5	15400	4060	7.5	23200	4060			
85.35	21	9.53	26600	3	-				5	13900	4060	7.5	20900	4060			
82.59	21	9.85	26600	3	-				5	13500	4060	7.5	20200	4060			
77.70	23	10.47	26600	3	-				5	12700	4060	7.5	19000	4060	10	25400	4060
72.46	24	11.23	26600	3	-				5	11800	4060	7.5	17700	4060	10	23700	4060
66.71	26	12.20	26600	3	-				5	10900	4060	7.5	16300	4060	10	21800	4060
63.27	28	12.86	26600	3	-				5	10300	4060	7.5	15500	4060	10	20700	4060
59.52	29	13.67	26600	3	-				5	9720	4060	7.5	14600	4060	10	19400	4060
51.10	34	15.92	26600	3	-				5	8340	4060	7.5	12500	4060	10	16700	4060
44.57	39	17.34	25200	3	-				5	7280	4060	7.5	10900	4060	10	14600	4060
37.84	46	19.78	24400	3	-				5	6180	4060	7.5	9270	4060	10	12400	4060
28.98	60	23.63	22400	3	-				5	4730	4060	7.5	7100	4060	10	9470	3940
25.31	69	25.86	21400	3	-				5	4130	4060	7.5	6200	3980	10	8260	3830
33.00	53	22.19	24700	2	-	3	3330	4060	5	5560	4060						
29.10	60	24.59	24100	2	-				5	4900	4060						
21.23	82	31.82	22700	2	-							7.5	5360	3860	10	7150	3750
16.96	103	39.48	22500	2	-							7.5	4280	3620	10	5710	3530
13.56	129	46.10	21000	2	-							7.5	3420	3390	10	4560	3320
10.00	175	56.47	19000	2	-												
8.49	206	51.66	14800	2	-							7.5	2140	2920	10	2860	2870
6.78	258	60.01	13700	2	-							7.5	1710	2730	10	2280	2690
5.42	323	69.67	12700	2	-							7.5	1370	2550	10	1830	2520
4.00	438	85.33	11500	2	-												

R97						AM254			AM256			AM284			AM286		
Ratio *i*	Output Speed n_a rpm	Input Power P_{emax} HP	Output Torque T_{amax} lb-in	Stages Pri.	Stages Sec.	Input Power P_e HP	Output Torque T_a lb-in	Output OHL F_{Ra} lb	Input Power P_e HP	Output Torque T_a lb-in	Output OHL F_{Ra} lb	Input Power P_e HP	Output Torque T_a lb-in	Output OHL F_{Ra} lb	Input Power P_e HP	Output Torque T_a lb-in	Output OHL F_{Ra} lb
51.10	34	15.92	26600	3	-	15	25000	4060									
44.57	39	17.34	25200	3	-	15	21800	3760									
37.84	46	19.78	24400	3	-	15	18500	3710									
28.98	60	23.63	22400	3	-	15	14200	3600	20	18900	3250						
25.31	69	25.86	21400	3	-	15	12400	3530	20	16500	3230						
21.23	82	31.82	22700	2	-	15	10700	3540	20	14300	3320						
16.96	103	39.48	22500	2	-	15	8560	3360	20	11400	3190	25	14300	3020	30	17100	2850
13.56	129	46.10	21000	2	-	15	6850	3190	20	9130	3050	25	11400	2910	30	13700	2780
10.00	175	56.47	19000	2	-	15	5050	2950	20	6730	2850	25	8420	2750	30	10100	2650
8.49	206	51.66	14800	2	-	15	4290	2770	20	5720	2660						
6.78	258	60.01	13700	2	-	15	3430	2610	20	4570	2520	25	5710	2440	30	6850	2360
5.42	323	69.67	12700	2	-	15	2740	2450	20	3650	2380	25	4560	2320	30	5480	2250
4.00	438	85.33	11500	2	-	15	2020	2250	20	2690	2200	25	3370	2150	30	4040	2100

Standard Contact with sales office Not available

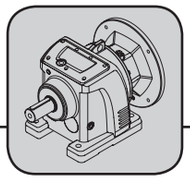

R107						AM213			AM215			AM254			AM256		
Ratio *i*	Output Speed n_a rpm	Input Power P_{emax} HP	Output Torque T_{amax} lb-in	Stages Pri.	Stages Sec.	Input Power P_e HP	Output Torque T_a lb-in	Output OHL F_{Ra} lb	Input Power P_e HP	Output Torque T_a lb-in	Output OHL F_{Ra} lb	Input Power P_e HP	Output Torque T_a lb-in	Output OHL F_{Ra} lb	Input Power P_e HP	Output Torque T_a lb-in	Output OHL F_{Ra} lb
115.50	15	10.1	38100	3	-	7.5	28300	6620	10.0	37700	6620						
106.76	16	10.9	38100	3	-	7.5	26100	6620	10.0	34900	6620						
103.02	17	11.3	38100	3	-	7.5	25200	6620	10.0	33600	6620						
86.50	20	13.5	38100	3	-	7.5	21200	6620	10.0	28200	6610						
79.95	22	14.6	38100	3	-	7.5	19600	6620	10.0	26100	6520						
68.27	26	17.1	38100	3	-	7.5	16700	6620	10.0	22300	6300						
62.90	28	18.5	38100	3	-	7.5	15400	6540	10.0	20500	6230	15.0	30800	5620			
53.71	33	21.7	38100	3	-	7.5	13200	6270	10.0	17500	6000	15.0	26300	5460	20.0	35100	4920
53.00	33	22.0	38100	3	-	7.5	13000	6290	10.0	17300	6040	15.0	26000	5530	20.0	34600	5030
44.50	39	26.2	38100	3	-	7.5	10900	6000	10.0	14500	5780	15.0	21800	5350	20.0	29100	4910
39.52	44	29.5	38100	3	-	7.5	9680	5830	10.0	12910	5640	15.0	19360	5260	20.0	25810	4890
34.23	51	32.7	36600	3	-	7.5	8380	5590	10.0	11180	5430	15.0	16770	5090	20.0	22360	4760
29.23	60	35.3	33700	3	-	7.5	7160	5340	10.0	9550	5200	15.0	14320	4900	20.0	19090	4610
25.52	69	39.8	33200	3	-	7.5	6250	5150	10.0	8340	5030	15.0	12500	4780	20.0	16670	4530
21.79	86	42.9	30500	3	-	7.5	5340	4920	10.0	7120	4810	15.0	10680	4590	20.0	14230	4370
13.09	126	53.9	23000	3	-	7.5	3210	4210	10.0	4280	4130	15.0	6410	3990	20.0	8550	3840
24.40	72	40.9	33600	2	-	7.5	6160	5090	10.0	8220	4970						
21.77	80	44.1	32300	2	-	7.5	5500	4920	10.0	7330	4810						
14.38	122	56.6	27400	2	-	7.5	3630	4350	10.0	4840	4280	15.0	7260	4130	20.0	9680	3980
10.44	168	72.0	25300	2	-	7.5	2640	3950	10.0	3520	3900	15.0	5270	3800	20.0	7030	3690
4.50	389	106.6	16100	2	-	7.5	1140	3020	10.0	1510	3000	15.0	2270	2940	20.0	3030	2890
4.00	437	115.1	15500	2	-	7.5	1010	2910	10.0	1350	2890	15.0	2020	2840	20.0	2700	2800

R107						AM284			AM286			AM324			AM326		
Ratio *i*	Output Speed n_a rpm	Input Power P_{emax} HP	Output Torque T_{amax} lb-in	Stages Pri.	Stages Sec.	Input Power P_e HP	Output Torque T_a lb-in	Output OHL F_{Ra} lb	Input Power P_e HP	Output Torque T_a lb-in	Output OHL F_{Ra} lb	Input Power P_e HP	Output Torque T_a lb-in	Output OHL F_{Ra} lb	Input Power P_e HP	Output Torque T_a lb-in	Output OHL F_{Ra} lb
44.50	39	26.2	38100	3	-	25.0	36300	4470									
39.52	44	29.5	38100	3	-	25.0	32260	4510									
34.23	51	32.7	36600	3	-	25.0	27950	4420	30.0	33540	4080						
29.23	60	35.3	33700	3	-	25.0	23870	4310	30.0	28640	4020						
25.52	69	39.8	33200	3	-	25.0	20840	4280	30.0	25010	4030						
21.79	86	42.9	30500	3	-	25.0	17790	4150	30.0	21350	3930	40.0	28470	3490			
13.09	126	53.9	23000	3	-	25.0	10690	3700	30.0	12830	3550	40.0	17100	3260			
10.44	168	72.0	25300	2	-	25.0	8790	3590	30.0	10550	3490	40.0	14060	3280	50	17580	3080
4.50	389	106.6	16100	2	-	25.0	3790	2840	30.0	4540	2790	40.0	6060	2690	50	7570	2580
4.00	437	115.1	15500	2		25.0	3370	2750	30.0	4040	2710	40.0	5390	2610	50	6740	2520

Standard Contact with sales office Not available

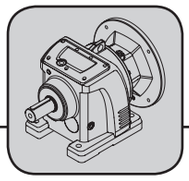

1750 Input Rpm

R137						AM254			AM256			AM284			AM286		
Ratio *i*	Output Speed n_a rpm	Iutput Power P_{emax} HP	Output Torque T_{amax} lb-in	Stages Pri.	Stages Sec.	Iutput Power P_e HP	Output Torque T_a lb-in	Output OHL F_{Ra} lb	Iutput Power P_e HP	Output Torque T_a lb-in	Output OHL F_{Ra} lb	Iutput Power P_e HP	Output Torque T_a lb-in	Output OHL F_{Ra} lb	Iutput Power P_e HP	Output Torque T_a lb-in	Output OHL F_{Ra} lb
117.25	15	16	62000	3	-	15.0	57400	9300									
107.80	16	18	62000	3	-	15.0	52800	9160									
99.66	18	19	62000	3	-	15.0	48800	9070									
91.63	19	21	62000	3	-	15.0	44900	8920	20.0	59900	8210						
79.05	22	24	62000	3	-	15.0	38700	8680	20.0	51600	8070						
70.35	25	27	62000	3	-	15.0	34500	8500	20.0	46000	7960						
59.14	30	32	62000	3	-	15.0	29000	8190	20.0	38600	7740	25.0	48300	7280	30.0	57900	6830
54.38	32	35	62000	3	-	15.0	26600	8020	20.0	35500	7600	25.0	44400	7180	30.0	53300	6760
50.13	35	38	62000	3	-	15.0	24600	7830	20.0	32700	7430	25.0	40900	7020	30.0	49100	6620
44.49	39	43	62000	3	-	15.0	21800	7650	20.0	29100	7300	25.0	36300	6960	30.0	43600	6620
43.25	40	44	62000	3	-	15.0	21200	7560	20.0	28300	7210	25.0	35300	6860	30.0	42400	6520
35.39	49	54	62000	3	-	15.0	17300	7190	20.0	23100	6910	25.0	28900	6620	30.0	34700	6340
32.81	53	58	62000	3	-	15.0	16100	7050	20.0	21400	6790	25.0	26800	6530	30.0	32100	6260
24.24	72	70	55400	3	-	15.0	11900	6440	20.0	15800	6220	25.0	19800	6010	30.0	23700	5790
20.68	85	78	52500	3	-	15.0	10100	6170	20.0	13500	5980	25.0	16900	5800	30.0	20300	5610
14.60	120	98	46800	3	-	15.0	7200	5590	20.0	9500	5460	25.0	11900	5330	30.0	14300	5200
23.45	75	31	24700	2	-	15.0	11800	6460	20.0	15800	6270						
21.56	81	35	25400	2	-	15.0	10900	6300	20.0	14500	6130						
17.15	102	42	24500	2	-	15.0	8700	5890	20.0	11500	5750						
14.96	117	76	38400	2	-	15.0	7600	5680	20.0	10100	5560	25.0	12600	5450	30.0	15100	5330
13.75	127	81	37600	2	-	15.0	6900	5540	20.0	9300	5430	25.0	11600	5320	30.0	13900	5210
10.12	173	116	39600	2	-	15.0	5100	5060	20.0	6800	4980	25.0	8500	4890	30.0	10200	4810
8.05	217	121	32900	2	-	15.0	4100	4710	20.0	5400	4640	25.0	6800	4580	30.0	8100	4510
4.87	360	122	20100	2	-	15.0	2500	4020	20.0	3300	3970	25.0	4100	3930	30.0	4900	3880
4.04	432	144	19600	2	-	15.0	2000	3790	20.0	2700	3750	25.0	3400	3720	30.0	4100	3680

R137						AM324			AM326			AM364			AM365		
Ratio *i*	Output Speed n_a rpm	Iutput Power P_{emax} HP	Output Torque T_{amax} lb-in	Stages Pri.	Stages Sec.	Iutput Power P_e HP	Output Torque T_a lb-in	Output OHL F_{Ra} lb	Iutput Power P_e HP	Output Torque T_a lb-in	Output OHL F_{Ra} lb	Iutput Power P_e HP	Output Torque T_a lb-in	Output OHL F_{Ra} lb	Iutput Power P_e HP	Output Torque T_a lb-in	Output OHL F_{Ra} lb
44.49	39	43	62000	3	-	40.0	58100	5930									
43.25	40	44	62000	3	-	40.0	56500	5830									
35.39	49	54	62000	3	-	40.0	46200	5770	50.0	57800	5210						
32.81	53	58	62000	3	-	40.0	42900	5740	50.0	53600	5210						
24.24	72	70	55400	3	-	40.0	31700	5360	50.0	39600	4920	60.0	47500	4490			
20.68	85	78	52500	3	-	40.0	27000	5240	50.0	33800	4880	60.0	40500	4510	75.0	50600	3950
14.60	120	98	46800	3	-	40.0	19100	4940	50.0	23800	4680	60.0	28600	4420	75.0	35800	4030
14.96	117	76	38400	2	-	40.0	20100	5090	50.0	25200	4860	60.0	30200	4620			
13.75	127	81	37600	2	-	40.0	18500	4990	50.0	23100	4770	60.0	27800	4550			
10.12	173	116	39600	2	-	40.0	13600	4650	50.0	17000	4490	60.0	20400	4330	75.0	25600	4090
8.05	217	121	32900	2	-	40.0	10800	4380	50.0	13600	4240	60.0	16300	4110	75.0	20300	3910
4.87	360	122	20100	2	-	40.0	6600	3790	50.0	8200	3700	60.0	9800	3610	75.0	12300	3480
4.04	432	144	19600	2		40.0	5400	3600	50.0	6800	3530	60.0	8200	3460	75.0	10200	3340

Standard Contact with sales office Not available

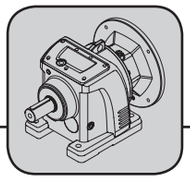

R147						AM256			AM284			AM286		
Ratio *i*	Output Speed n_a rpm	Input Power P_{emax} HP	Output Torque T_{amax} lb-in	Stages Pri.	Stages Sec.	Input Power P_e HP	Output Torque T_a lb-in	Output OHL F_{Ra} lb	Input Power P_e HP	Output Torque T_a lb-in	Output OHL F_{Ra} lb	Input Power P_e HP	Output Torque T_a lb-in	Output OHL F_{Ra} lb
117.29	15	30.1	115100	3	-	20	76600	14100						
109.03	16	32.3	115100	3	-	20	71200	14100						
99.44	18	35.5	115100	3	-	20	65000	14100	25	81200	14100			
89.86	19	39.2	115100	3	-	20	58700	14100	25	73400	14100			
83.30	21	42.3	115100	3	-	20	54400	14100	25	68000	14100	30	81600	14100
70.80	25	49.8	115100	3	-	20	46200	14100	25	57800	14100	30	69400	14100
60.38	29	58.4	115100	3	-	20	39400	14100	25	49300	14100	30	59200	14100
50.49	35	69.8	115100	3	-	20	33000	14100	25	41200	14100	30	49500	13800
44.98	39	75.4	110700	3	-	20	29400	13900	25	36700	13700	30	44100	13400
41.70	42	79.3	108000	3	-	20	27200	13600	25	34000	13400	30	40900	13200
35.44	49	88.4	102300	3	-	20	23100	13000	25	28900	12800	30	34700	12600
30.23	58	98.2	97000	3	-	20	19700	12400	25	24700	12200	30	29600	12100
25.27	69	110.7	91400	3	-	20	16500	11800	25	20600	11600	30	24800	11500
19.99	88	129.4	84500	3	-	20	13100	11000	25	16300	10800	30	19600	10700
19.82	88	126.2	84300	2	-	20	13300	10900	25	16700	10800	30	20000	10700
15.62	112	148	77800	2	-	20	10500	10100	25	13100	10100	30	15800	9960
13.32	131	165	73800	2	-	20	9000	9660	25	11200	9580	30	13500	9500
10.24	171	192	66100	2	-	20	6900	8880	25	8600	8820	30	10300	8760
5.00	350	309	52100	2	-	20	3400	7070	25	4200	7040	30	5100	7010
4.16	421	350	48900	2	-	20	2800	6660	25	3500	6640	30	4200	6610

R147						AM324			AM326			AM364		
Ratio *i*	Output Speed n_a rpm	Input Power P_{emax} HP	Output Torque T_{amax} lb-in	Stages Pri.	Stages Sec.	Input Power P_e HP	Output Torque T_a lb-in	Output OHL F_{Ra} lb	Input Power P_e HP	Output Torque T_a lb-in	Output OHL F_{Ra} lb	Input Power P_e HP	Output Torque T_a lb-in	Output OHL F_{Ra} lb
60.38	29	58.4	115100	3	-	40	78900	13800						
50.49	35	69.8	115100	3	-	40	66000	13200	50	82500	12700			
44.98	39	75.4	110700	3	-	40	58800	12900	50	73500	12400			
41.70	42	79.3	108000	3	-	40	54500	12700	50	68100	12200	60	81700	11700
35.44	49	88.4	102300	3	-	40	46300	12200	50	57900	11800	60	69400	11400
30.23	58	98.2	97000	3	-	40	39500	11700	50	49400	11400	60	59200	11000
25.27	69	110.7	91400	3	-	40	33000	11200	50	41300	10900	60	49500	10600
19.99	88	129.4	84500	3	-	40	26100	10500	50	32600	10300	60	39200	10000
19.82	88	126.2	84300	2	-	40	26700	10500	50	33400	10200	60	40000	9990
15.62	112	148	77800	2	-	40	21000	9780	50	26300	9600	60	31500	9410
13.32	131	165	73800	2	-	40	17900	9340	50	22400	9190	60	26900	9030
10.24	171	192	66100	2	-	40	13800	8640	50	17200	8520	60	20700	8400
5.00	350	309	52100	2	-	40	6700	6950	50	8400	6890	60	10100	6830
4.16	421	350	48900	2	-	40	5600	6560	50	7000	6510	60	8400	6460

3

R147						AM365			AM404			AM405		
Ratio *i*	Output Speed n_a rpm	Input Power P_{emax} HP	Output Torque T_{amax} lb-in	Stages Pri.	Stages Sec.	Input Power P_e HP	Output Torque T_a lb-in	Output OHL F_{Ra} lb	Input Power P_e HP	Output Torque T_a lb-in	Output OHL F_{Ra} lb	Input Power P_e HP	Output Torque T_a lb-in	Output OHL F_{Ra} lb
30.23	58	98.2	97000	3	-	75	74000	10500						
25.27	69	110.7	91400	3	-	75	61900	10200						
19.99	88	129.4	84500	3	-	75	49000	9710	100	65300	9140			
19.82	88	126.2	84300	2	-	75	50100	9640	100	66700	9060			
15.62	112	148	77800	2	-	75	39400	9140	100	52600	8680	125	65700	8230
13.32	131	165	73800	2	-	75	33600	8800	100	44800	8410	125	56100	8020
10.24	171	192	66100	2	-	75	25900	8210	100	34500	7910	125	43100	7600
5.00	350	309	52100	2	-	75	12600	6740	100	16800	6590	125	21000	6440
4.16	421	350	48900	2	-	75	10500	6390	100	14000	6260	125	17500	6140

Standard Contact with sales office Not available

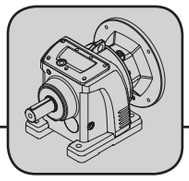

1750 Input Rpm

R167						AM256			AM284			AM286		
Ratio *i*	Output Speed n_a rpm	Input Power P_{emax} HP	Output Torque T_{amax} lb-in	Stages Pri.	Stages Sec.	Input Power P_e HP	Output Torque T_a lb-in	Output OHL F_{Ra} lb	Input Power P_e HP	Output Torque T_a lb-in	Output OHL F_{Ra} lb	Input Power P_e HP	Output Torque T_a lb-in	Output OHL F_{Ra} lb
178.17	10	27	159400	3	-	20	116400	19800						
169.42	10	29	159400	3	-	20	110700	19800						
158.37	11	31	159400	3	-	20	103500	19800	25	129300	19800	30	155200	19800
139.60	13	35	159400	3	-	20	91200	19800	25	114000	19800	30	136800	19800
121.56	14	40	159400	3	-	20	79400	19800	25	99300	19800	30	119100	19400
109.89	16	44	159400	3	-	20	71800	19800	25	89700	19400	30	107700	19000
101.64	17	48	159400	3	-	20	66400	19400	25	83000	19000	30	99600	18600
88.17	20	55	159400	3	-	20	57600	18700	25	72000	18300	30	86400	18000
80.58	22	61	159400	3	-	20	52600	18200	25	65800	17900	30	79000	17500
69.80	25	70	159400	3	-	20	45600	17500	25	57000	17200	30	68400	16900
60.56	29	81	159400	3	-	20	39600	16800	25	49400	16500	30	59300	16300
53.92	32	91	159400	3	-	20	35200	16100	25	44000	15800	30	52800	15600
48.52	36	101	159400	3	-	20	31700	15600	25	39600	15400	30	47500	15100
43.86	40	111	159400	3	-	20	28700	15100	25	35800	14900	30	43000	14700
35.19	50	139	159400	3	-	20	23000	14200	25	28700	14000	30	34500	13800
27.86	63	164	149700	3	-	20	18200	13200	25	22700	13100	30	27300	12900
21.19	83	197	136400	3	-	20	13800	12100	25	17300	12000	30	20800	11900
23.78	74	199	159400	2	-	20	16000	12600	25	20000	12500	30	24000	12400
19.89	88	230	154100	2	-	20	13400	11900	25	16700	11800	30	20100	11800
15.77	111	269	142600	2	-	20	10600	11100	25	13300	11000	30	15900	10900
13.66	128	297	136400	2	-	20	9200	10600	25	11500	10500	30	13800	10500
10.39	168	355	124000	2	-	20	7000	9700	25	8700	9650	30	10500	9610
5.10	343	495	85000	2	-	20	3400	7690	25	4300	7670	30	5100	7640
3.93	445	508	67300	2	-	20	2600	7070	25	3300	7050	30	4000	7030

R167						AM324			AM326			AM364		
Ratio *i*	Output Speed n_a rpm	Input Power P_{emax} HP	Output Torque T_{amax} lb-in	Stages Pri.	Stages Sec.	Input Power P_e HP	Output Torque T_a lb-in	Output OHL F_{Ra} lb	Input Power P_e HP	Output Torque T_a lb-in	Output OHL F_{Ra} lb	Input Power P_e HP	Output Torque T_a lb-in	Output OHL F_{Ra} lb
121.56	14	40	159400	3	-	40	158800	18400						
109.89	16	44	159400	3	-	40	143600	18000						
101.64	17	48	159400	3	-	40	132800	17800						
88.17	20	55	159400	3	-	40	115200	17200	50	144000	16500			
80.58	22	61	159400	3	-	40	105300	16900	50	131600	16200	60	157900	15600
69.80	25	70	159400	3	-	40	91200	16300	50	114000	15700	60	136800	15200
60.56	29	81	159400	3	-	40	79100	15800	50	98900	15300	60	118700	14800
53.92	32	91	159400	3	-	40	70400	15100	50	88100	14600	60	105700	14100
48.52	36	101	159400	3	-	40	63400	14700	50	79200	14200	60	95100	13800
43.86	40	111	159400	3	-	40	57300	14300	50	71600	13900	60	86000	13500
35.19	50	139	159400	3	-	40	46000	13500	50	57500	13200	60	69000	12900
27.86	63	164	149700	3	-	40	36400	12700	50	45500	12400	60	54600	12200
21.19	83	197	136400	3	-	40	27700	11700	50	34600	11500	60	41500	11300
23.78	74	199	159400	2	-	40	32000	12200	50	40000	12000	60	48000	11800
19.89	88	230	154100	2	-	40	26800	11600	50	33500	11400	60	40200	11200
15.77	111	269	142600	2	-	40	21200	10800	50	26500	10700	60	31900	10500
13.66	128	297	136400	2	-	40	18400	10400	50	23000	10200	60	27600	10100
10.39	168	355	124000	2	-	40	14000	9520	50	17500	9430	60	21000	9340
5.10	343	495	85000	2	-	40	6900	7590	50	8600	7540	60	10300	7490
3.93	445	508	67300	2	-	40	5300	6990	50	6600	6950	60	7900	6920

Standard Contact with sales office Not available

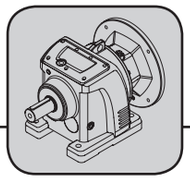

R167						AM365			AM405			AM444		
Ratio *i*	Output Speed n_a rpm	Input Power P_{emax} HP	Output Torque T_{amax} lb-in	Stages Pri.	Stages Sec.	Input Power P_e HP	Output Torque T_a lb-in	Output OHL F_{Ra} lb	Input Power P_e HP	Output Torque T_a lb-in	Output OHL F_{Ra} lb	Input Power P_e HP	Output Torque T_a lb-in	Output OHL F_{Ra} lb
60.56	29	81	159400	3	-	75	148300	14000						
53.92	32	91	159400	3	-	75	132100	13300						
48.52	36	101	159400	3	-	75	118900	13100						
43.86	40	111	159400	3	-	75	107400	12900						
35.19	50	139	159400	3	-	75	86200	12400	100	114900	11500	125	143700	10700
27.86	63	164	149700	3	-	75	68200	11800	100	91000	11100	125	113700	10500
21.19	83	197	136400	3	-	75	51900	11000	100	69200	10500	125	86500	10000
23.78	74	199	159400	2	-	75	60100	11500						
19.89	88	230	154100	2	-	75	50200	11000	100	67000	10600	125	83700	10100
15.77	111	269	142600	2	-	75	39800	10300	100	53100	10000	125	66400	9670
13.66	128	297	136400	2	-	75	34500	9950	100	46000	9650	125	57500	9360
10.39	168	355	124000	2	-	75	26200	9210	100	35000	8990	125	43700	8770
5.10	343	495	85000	2	-	75	12900	7420	100	17200	7300	125	21500	7170
3.93	445	508	67300	2	-	75	9900	6860	100	13200	6770	125	16600	6670

R167						AM445		
Ratio *i*	Output Speed n_a rpm	Input Power P_{emax} HP	Output Torque T_{amax} lb-in	Stages Pri.	Stages Sec.	Input Power P_e HP	Output Torque T_a lb-in	Output OHL F_{Ra} lb
35.19	50	139	159400	3	-	139	159400	10300
27.86	63	164	149700	3	-	150	136200	9800
21.19	83	197	136400	3	-	150	103600	9600
19.89	88	230	154100	2	-	150	100200	9700
15.77	111	269	142600	2	-	150	79400	9300
13.66	128	297	136400	2	-	150	68800	9100
10.39	168	355	124000	2	-	150	52300	8500
5.10	343	495	85000	2	-	150	25700	7100
3.93	445	508	67300	2	-	150	19800	6600

Standard Contact with sales office Not available

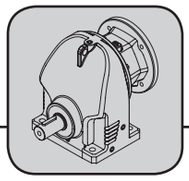

3.2 Selection Table: RX57~RX107

RX57						AM56			AM143			AM145		
Ratio *i*	Output Speed n_a rpm	Input Power P_{emax} HP	Output Torque T_{amax} lb-in	Stages Pri.	Stages Sec.	Input Power P_e HP	Output Torque T_a lb-in	Output OHL F_{Ra} lb	Input Power P_e HP	Output Torque T_a lb-in	Output OHL F_{Ra} lb	Input Power P_e HP	Output Torque T_a lb-in	Output OHL F_{Ra} lb
5.47	320	1.59	303	1	-	0.75	144	500	1	192	490			
4.88	359	1.70	288	1	-	0.75	129	485	1	172	480			
4.55	385	2.02	320	1	-	0.75	120	465	1	160	455			
4.05	432	2.45	345	1	-	0.75	107	460	1	142	455			
3.63	482	3.04	382	1	-	0.75	96	435	1	128	425	2	255	385
3.19	549	4.04	447	1	-	0.75	84	420	1	112	410	2	224	380
3.00	583	4.22	439	1	-	0.75	79	415	1	105	405	2	211	375
2.23	785	5.41	418	1	-	0.75	59	375	1	78	370	2	157	345
1.59	1101	6.35	350	1	-	0.75	42	340	1	56	335	2	112	315
1.31	1336	7.58	344	1	-	0.75	35	325	1	46	320	2	92	310

RX57						AM182			AM184		
Ratio *i*	Output Speed n_a rpm	Input Power P_{emax} HP	Output Torque T_{amax} lb-in	Stages Pri.	Stages Sec.	Input Power P_e HP	Output Torque T_a lb-in	Output OHL F_{Ra} lb	Input Power P_e HP	Output Torque T_a lb-in	Output OHL F_{Ra} lb
3.19	549	4.04	447	1	-	3	336	345			
2.23	785	5.41	418	1	-	3	235	295	5	392	255
1.59	1101	6.35	350	1	-	3	168	285	5	279	245
1.31	1336	7.58	344	1	-	3	138	280	5	230	210

Standard Contact with sales office Not available

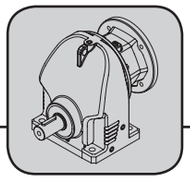

RX67						AM56			AM143			AM145		
Ratio *i*	Output Speed n_a rpm	Input Power P_{emax} HP	Output Torque T_{amax} lb-in	Stages Pri.	Stages Sec.	Input Power P_e HP	Output Torque T_a lb-in	Output OHL F_{Ra} lb	Input Power P_e HP	Output Torque T_a lb-in	Output OHL F_{Ra} lb	Input Power P_e HP	Output Torque T_a lb-in	Output OHL F_{Ra} lb
6.27	279	1.56	340	1	-	0.75	165	610	1	220	605			
5.47	320	1.97	374	1	-	0.75	144	590	1	192	580			
4.95	354	2.14	368	1	-	0.75	130	560	1	174	550			
4.53	386	2.96	465	1	-	0.75	119	550	1	159	545			
3.52	497	4.11	502	1	-	0.75	93	505	1	124	495	2	247	465
2.89	606	5.42	543	1	-	0.75	76	480	1	102	475	2	203	455
2.72	643	6.60	623	1	-	0.75	72	465	1	96	460	2	191	440
2.35	745	7.56	616	1	-							2	165	425
1.86	941	9.43	617	1	-							2	131	400
1.62	1080	9.64	584	1	-									
1.40	1250	10.36	542	1	-									

RX67						AM182			AM184		
Ratio *i*	Output Speed n_a rpm	Input Power P_{emax} HP	Output Torque T_{amax} lb-in	Stages Pri.	Stages Sec.	Input Power P_e HP	Output Torque T_a lb-in	Output OHL F_{Ra} lb	Input Power P_e HP	Output Torque T_a lb-in	Output OHL F_{Ra} lb
3.52	497	4.11	502	1	-	3	371	420			
2.89	606	5.42	543	1	-	3	305	435			
2.72	643	6.60	623	1	-	3	287	420	5	478	400
2.35	745	7.56	616	1	-	3	248	405	5	413	385
1.86	941	9.43	617	1	-	3	196	385	5	327	365
1.62	1080	9.64	584	1	-				5	285	345
1.4	1250	10.36	542	1	-				5	246	280

Standard Contact with sales office Not available

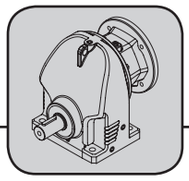

1750 Input Rpm

RX77						AM56			AM143			AM145		
Ratio *i*	Output Speed n_a rpm	Input Power P_{emax} HP	Output Torque T_{amax} lb-in	Stages Pri.	Stages Sec.	Input Power P_e HP	Output Torque T_a lb-in	Output OHL F_{Ra} lb	Input Power P_e HP	Output Torque T_a lb-in	Output OHL F_{Ra} lb	Input Power P_e HP	Output Torque T_a lb-in	Output OHL F_{Ra} lb
8.09	216	1.63	458	1	-	0.75	213	1160	1	284	1150			
7.50	233	1.64	426	1	-	0.75	198	1135	1	264	1125			
6.69	262	1.96	456	1	-	0.75	176	1090	1	235	1085			
6.00	292	2.29	476	1	-	0.75	158	1055	1	211	1050			
5.12	342	2.77	493	1	-	0.75	135	1005	1	180	1000			
4.74	369	3.59	590	1	-	0.75	125	970	1	167	960	2	333	925
4.55	385	4.68	739	1	-	0.75	120	955	1	160	950	2	320	920
4.19	418	6.16	895	1	-							2	295	895
3.75	467	6.97	907	1	-							2	264	870
3.25	538	8.20	924	1	-							2	228	845
2.67	655	10.78	999	1	-									
2.38	735	13.43	1108	1	-									
2.13	822	14.50	1072	1	-									
1.96	893	13.90	945	1	-									
1.66	1054	14.74	849	1	-									

RX77						AM182			AM184			AM213		
Ratio *i*	Output Speed n_a rpm	Input Power P_{emax} HP	Output Torque T_{amax} lb-in	Stages Pri.	Stages Sec.	Input Power P_e HP	Output Torque T_a lb-in	Output OHL F_{Ra} lb	Input Power P_e HP	Output Torque T_a lb-in	Output OHL F_{Ra} lb	Input Power P_e HP	Output Torque T_a lb-in	Output OHL F_{Ra} lb
4.19	418	6.16	895	1	-	3.0	442	855						
3.25	538	8.20	924	1	-	3.0	343	830						
2.67	655	10.78	999	1	-	3.0	282	760	5	469	665	7.5	704	550
2.38	735	13.43	1108	1	-	3.0	251	750	5	418	650	7.5	627	535
2.13	822	14.50	1072	1	-				5	374	645	7.5	561	520
1.96	893	13.90	945	1	-				5	344	630	7.5	517	505
1.66	1054	14.74	849	1	-				5	292	615	7.5	438	490

Standard Contact with sales office Not available

3

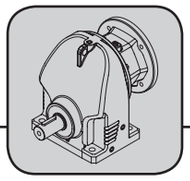

RX87						AM182			AM184			AM213		
Ratio *i*	Output Speed n_a rpm	Input Power P_{emax} HP	Output Torque T_{amax} lb-in	Stages Pri.	Stages Sec.	Input Power P_e HP	Output Torque T_a lb-in	Output OHL F_{Ra} lb	Input Power P_e HP	Output Torque T_a lb-in	Output OHL F_{Ra} lb	Input Power P_e HP	Output Torque T_a lb-in	Output OHL F_{Ra} lb
5.50	318	6.59	1257	1	-	3	580	1115	5	966	1055			
4.85	361	6.84	1151	1	-	3	511	1075	5	852	1020			
4.43	395	6.91	1062	1	-	3	467	1045	5	778	990			
3.77	464	11.51	1505	1	-							7.5	994	925
3.54	494	12.83	1575	1	-							7.5	933	890
3.19	549	14.40	1593	1	-							7.5	841	870
2.83	618	18.03	1770	1	-							7.5	746	845
2.52	694	20.25	1770	1	-							7.5	664	820
2.26	774	23.71	1859	1	-							7.5	596	795
2.14	818	25.04	1859	1	-									
2.04	858	26.27	1859	1	-							7.5	538	785
1.67	1048	27.94	1619	1	-									

RX87						AM215			AM254			AM256		
Ratio *i*	Output Speed n_a rpm	Input Power P_{emax} HP	Output Torque T_{amax} lb-in	Stages Pri.	Stages Sec.	Input Power P_e HP	Output Torque T_a lb-in	Output OHL F_{Ra} lb	Input Power P_e HP	Output Torque T_a lb-in	Output OHL F_{Ra} lb	Input Power P_e HP	Output Torque T_a lb-in	Output OHL F_{Ra} lb
3.77	464	11.51	1505	1	-	10	1325	880						
3.54	494	12.83	1575	1	-	10	1244	845						
3.19	549	14.40	1593	1	-	10	1121	825						
2.83	618	18.03	1770	1	-	10	995	800						
2.52	694	20.25	1770	1	-	10	886	780	15	1328	735	20	1771	700
2.26	774	23.71	1859	1	-	10	794	755	15	1191	720	20	1589	675
2.14	818	25.04	1859	1	-				15	1128	705	20	1504	665
2.04	858	26.27	1859	1	-	10	717	745	15	1075	685	20	1434	655
1.67	1048	27.94	1619	1	-				15	880	670	20	1174	635

Standard Contact with sales office Not available

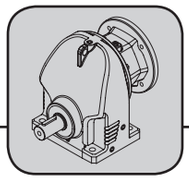

1750 Input Rpm

RX97						AM182			AM184			AM213		
Ratio *i*	Output Speed n_a rpm	Input Power P_{emax} HP	Output Torque T_{amax} lb-in	Stages Pri.	Stages Sec.	Input Power P_e HP	Output Torque T_a lb-in	Output OHL F_{Ra} lb	Input Power P_e HP	Output Torque T_a lb-in	Output OHL F_{Ra} lb	Input Power P_e HP	Output Torque T_a lb-in	Output OHL F_{Ra} lb
5.65	310	8.70	1706	1	-	3	596	1750	5	993	1715			
4.96	353	10.50	1807	1	-	3	523	1660	5	872	1620	7.5	1307	1565
4.42	396	18.40	2821	1	-							7.5	1165	1520
3.81	459	30.79	4069	1	-									
3.48	503	33.72	4070	1	-									
3.07	570	38.23	4071	1	-									
2.68	653	43.80	4071	1	-									
2.32	754	49.99	4023	1	-									
2.25	778	48.95	3820	1	-									
2.12	825	51.93	3819	1	-									
1.89	926	54.79	3592	1	-									
1.71	1023	60.43	3584	1	-									

RX97						AM215			AM254			AM256		
Ratio *i*	Output Speed n_a rpm	Input Power P_{emax} HP	Output Torque T_{amax} lb-in	Stages Pri.	Stages Sec.	Input Power P_e HP	Output Torque T_a lb-in	Output OHL F_{Ra} lb	Input Power P_e HP	Output Torque T_a lb-in	Output OHL F_{Ra} lb	Input Power P_e HP	Output Torque T_a lb-in	Output OHL F_{Ra} lb
4.96	353	10.50	1807	1	-	10	1743	1515						
4.42	396	18.40	2821	1	-	10	1553	1470						
3.81	459	30.79	4069	1	-				15	2008	1415	20	2678	1360
3.48	503	33.72	4070	1	-				15	1835	1310	20	2446	1235
3.07	570	38.23	4071	1	-				15	1618	1340	20	2158	1300
2.68	653	43.80	4071	1	-				15	1413	1230	20	1884	1170
2.32	754	49.99	4023	1	-									
2.25	778	48.95	3820	1	-									
2.12	825	51.93	3819	1	-				15	1118	1150	20	1490	1105
1.89	926	54.79	3592	1	-									
1.71	1023	60.43	3584	1	-									

RX97						AM284			AM286			AM324		
Ratio *i*	Output Speed n_a rpm	Input Power P_{emax} HP	Output Torque T_{amax} lb-in	Stages Pri.	Stages Sec.	Input Power P_e HP	Output Torque T_a lb-in	Output OHL F_{Ra} lb	Input Power P_e HP	Output Torque T_a lb-in	Output OHL F_{Ra} lb	Input Power P_e HP	Output Torque T_a lb-in	Output OHL F_{Ra} lb
3.81	459	30.79	4069	1	-	25	3347	1275	30	4017	1115			
3.48	503	33.72	4070	1	-	25	3058	1260	30	3669	1105			
3.07	570	38.23	4071	1	-	25	2697	1225	30	3237	990			
2.68	653	43.80	4071	1	-	25	2355	1115	30	2826	950	40	3767	845
2.32	754	49.99	4023	1	-	25	2038	1085	30	2446	895	40	3261	820
2.25	778	48.95	3820	1	-	25	1977	1070	30	2372	880	40	3163	805
2.12	825	51.93	3819	1	-	25	1863	1055	30	2235	845	40	2980	780
1.89	926	54.79	3592	1	-	25	1661	1040	30	1993	825	40	2657	765
1.71	1023	60.43	3584	1	-	25	1502	1010	30	1803	805	40	2404	740

Standard Contact with sales office Not available

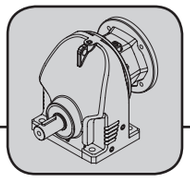

RX107						AM182			AM184			AM213			AM215		
Ratio *i*	Output Speed n_a rpm	Input Power P_{emax} HP	Output Torque T_{amax} lb-in	Stages Pri.	Stages Sec.	Input Power P_e HP	Output Torque T_a lb-in	Output OHL F_{Ra} lb	Input Power P_e HP	Output Torque T_a lb-in	Output OHL F_{Ra} lb	Input Power P_e HP	Output Torque T_a lb-in	Output OHL F_{Ra} lb	Input Power P_e HP	Output Torque T_a lb-in	Output OHL F_{Ra} lb
6.38	274	8.72	1929	1	-	3	673	2085	5	1121	2035						
5.50	318	10.30	1965	1	-	3	580	1990	5	966	1945	7.5	1450	1890	10.0	1933	1840
4.90	357	23.69	4027	1	-												
4.13	424	32.13	4602	1	-												
3.37	519	43.16	5045	1	-												
3.12	561	52.34	5664	1	-												
2.30	761	71.00	5664	1	-												
1.91	916	78.30	5187	1	-												
1.39	1259	86.78	4184	1	-												

RX107						AM254			AM256			AM284			AM286		
Ratio *i*	Output Speed n_a rpm	Input Power P_{emax} HP	Output Torque T_{amax} lb-in	Stages Pri.	Stages Sec.	Input Power P_e HP	Output Torque T_a lb-in	Output OHL F_{Ra} lb	Input Power P_e HP	Output Torque T_a lb-in	Output OHL F_{Ra} lb	Input Power P_e HP	Output Torque T_a lb-in	Output OHL F_{Ra} lb	Input Power P_e HP	Output Torque T_a lb-in	Output OHL F_{Ra} lb
4.90	357	23.69	4027	1	-	15	2583	1685	20	3444	1590						
4.13	424	32.13	4602	1	-	15	2177	1620	20	2903	1535	25	3629	1455	30	4354	1370
3.37	519	43.16	5045	1	-							25	2961	1425	30	3553	1335
3.12	561	52.34	5664	1	-							25	2741	1405	30	3289	1305
2.30	761	71.00	5664	1	-												
1.91	916	78.30	5187	1	-												
1.39	1259	86.78	4184	1	-												

RX107						AM324			AM326		
Ratio *i*	Output Speed n_a rpm	Input Power P_{emax} HP	Output Torque T_{amax} lb-in	Stages Pri.	Stages Sec.	Input Power P_e HP	Output Torque T_a lb-in	Output OHL F_{Ra} lb	Input Power P_e HP	Output Torque T_a lb-in	Output OHL F_{Ra} lb
3.37	519	43.16	5045	1	-	40	4737	1265			
3.12	561	52.34	5664	1	-	40	4386	1225	50	5482	1015
2.30	761	71.00	5664	1	-				50	4042	990
1.91	916	78.30	5187	1	-				50	3356	940
1.39	1259	86.78	4184	1	-				50	2443	880

Standard Contact with sales office Not available

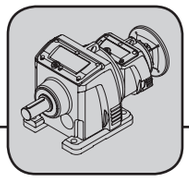

3.3 Selection Table: Double Reduction

R47R37						AM56			AM143			AM145		
Ratio *i*	Output Speed n_a rpm	Input Power P_{emax} HP	Output Torque T_{amax} lb-in	Stages Pri.	Stages Sec.	Input Power P_e HP	Output Torque T_a lb-in	Output OHL F_{Ra} lb	Input Power P_e HP	Output Torque T_a lb-in	Output OHL F_{Ra} lb	Input Power P_e HP	Output Torque T_a lb-in	Output OHL F_{Ra} lb
13761	0.13	0.006	2660	3	3	0.006	2660	1220	0.006	2660	1220			
12428	0.14	0.007	2660	3	3	0.007	2660	1220	0.007	2660	1220			
11863	0.15	0.008	2660	3	3	0.008	2660	1220	0.008	2660	1220			
10714	0.16	0.008	2660	3	3	0.008	2660	1220	0.008	2660	1220			
9103	0.19	0.01	2660	3	3	0.01	2660	1220	0.01	2660	1220			
7933	0.22	0.01	2660	3	3	0.01	2660	1220	0.01	2660	1220			
6943	0.25	0.01	2660	3	3	0.01	2660	1220	0.01	2660	1220			
6051	0.29	0.01	2660	3	3	0.01	2660	1220	0.01	2660	1220			
5373	0.33	0.02	2660	3	3	0.02	2660	1220	0.02	2660	1220			
4853	0.36	0.02	2660	3	3	0.02	2660	1220	0.02	2660	1220			
4378	0.40	0.02	2660	3	3	0.02	2660	1220	0.02	2660	1220			
3987	0.44	0.02	2660	3	3	0.02	2660	1220	0.02	2660	1220			
3474	0.50	0.03	2660	3	3	0.03	2660	1220	0.03	2660	1220			
3085	0.57	0.03	2660	3	3	0.03	2660	1220	0.03	2660	1220			
2835	0.62	0.03	2660	2	3	0.03	2660	1220	0.03	2660	1220			
2575	0.68	0.03	2660	3	3	0.03	2660	1220	0.03	2660	1220			
2542	0.69	0.03	2660	2	3	0.03	2660	1220	0.03	2660	1220			
2444	0.72	0.04	2660	2	3	0.04	2660	1220	0.04	2660	1220			
2437	0.72	0.04	2660	3	2	0.04	2660	1220	0.04	2660	1220			
2197	0.80	0.04	2660	3	2	0.04	2660	1220	0.04	2660	1220			
2191	0.80	0.04	2660	2	3	0.04	2660	1220	0.04	2660	1220			
1984	0.88	0.04	2660	3	2	0.04	2660	1220	0.04	2660	1220			
1780	0.98	0.05	2660	3	2	0.05	2660	1220	0.05	2660	1220			
1682	1.04	0.05	2660	2	3	0.05	2660	1220	0.05	2660	1220			
1566	1.12	0.06	2660	3	2	0.06	2660	1220	0.06	2660	1220	0.06	2660	1220
1465	1.19	0.06	2660	2	3	0.06	2660	1220	0.06	2660	1220			
1300	1.35	0.07	2660	3	2	0.07	2660	1220	0.07	2660	1220	0.07	2660	1220
1283	1.36	0.07	2660	2	3	0.07	2660	1220	0.07	2660	1220			
1167	1.50	0.07	2660	3	2	0.07	2660	1220	0.07	2660	1220	0.07	2660	1220
1118	1.57	0.08	2660	2	3	0.08	2660	1220	0.08	2660	1220			
1107	1.58	0.08	2660	2	3	0.08	2660	1220	0.08	2660	1220			
997	1.76	0.09	2660	3	2	0.09	2660	1220	0.09	2660	1220	0.09	2660	1220
993	1.76	0.09	2660	2	3	0.09	2660	1220	0.09	2660	1220			
845	2.07	0.10	2660	3	2	0.10	2660	1220	0.10	2660	1220	0.10	2660	1220
809	2.16	0.11	2660	2	3	0.11	2660	1220	0.11	2660	1220			
736	2.38	0.12	2660	2	3	0.12	2660	1220	0.12	2660	1220			
670	2.61	0.13	2660	3	2	0.13	2660	1220	0.13	2660	1220	0.13	2660	1220
642	2.73	0.13	2660	2	3	0.13	2660	1220	0.13	2660	1220			
572	3.06	0.15	2660	3	2	0.15	2660	1220	0.15	2660	1220	0.15	2660	1220
570	3.07	0.15	2660	2	3	0.15	2660	1220	0.15	2660	1220			
485	3.61	0.18	2660	3	2	0.18	2660	1220	0.18	2660	1220	0.18	2660	1220
476	3.68	0.18	2660	2	3	0.18	2660	1220	0.18	2660	1220			
450	3.89	0.19	2660	2	2	0.19	2660	1220	0.19	2660	1220			
406	4.31	0.21	2660	2	2	0.21	2660	1220	0.21	2660	1220			
398	4.40	0.22	2660	3	2	0.22	2660	1220	0.22	2660	1220	0.22	2660	1220
366	4.78	0.23	2660	2	2	0.23	2660	1220	0.23	2660	1220			
329	5.32	0.26	2660	2	2	0.26	2660	1220	0.26	2660	1220			
289	6.05	0.29	2660	2	2	0.29	2660	1220	0.29	2660	1220	0.29	2660	1220
240	7.29	0.35	2660	2	2	0.35	2660	1220	0.35	2660	1220	0.35	2660	1220
216	8.12	0.39	2660	2	2	0.39	2660	1220	0.39	2660	1220	0.39	2660	1220
184	9.50	0.46	2660	2	2	0.46	2660	1220	0.46	2660	1220	0.46	2660	1220
156	11.21	0.54	2660	2	2	0.54	2660	1220	0.54	2660	1220	0.54	2660	1220
124	14.14	0.68	2660	2	2	0.68	2660	1220	0.68	2660	1220	0.68	2660	1220
106	16.55	0.79	2660	2	2	0.75	2510	1220	0.79	2660	1220	0.79	2660	1220

Standard Contact with sales office Not available

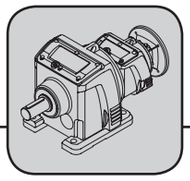

R57R37						AM56			AM143			AM145		
Ratio *i*	Output Speed n_a rpm	Input Power P_{emax} HP	Output Torque T_{amax} lb-in	Stages Pri.	Stages Sec.	Input Power P_e HP	Output Torque T_a lb-in	Output OHL F_{Ra} lb	Input Power P_e HP	Output Torque T_a lb-in	Output OHL F_{Ra} lb	Input Power P_e HP	Output Torque T_a lb-in	Output OHL F_{Ra} lb
14081	0.12	0.009	3990	3	3	0.009	3990	1600	0.009	3990	1600			
12139	0.14	0.01	3990	3	3	0.01	3990	1600	0.01	3990	1600			
10228	0.17	0.01	3990	3	3	0.01	3990	1600	0.01	3990	1600			
9315	0.19	0.01	3990	3	3	0.01	3990	1600	0.01	3990	1600			
8413	0.21	0.02	3990	3	3	0.02	3990	1600	0.02	3990	1600			
7331	0.24	0.02	3990	3	3	0.02	3990	1600	0.02	3990	1600			
6417	0.27	0.02	3990	3	3	0.02	3990	1600	0.02	3990	1600			
5498	0.32	0.02	3990	3	3	0.02	3990	1600	0.02	3990	1600			
4801	0.36	0.03	3990	3	3	0.03	3990	1600	0.03	3990	1600			
4479	0.39	0.03	3990	3	3	0.03	3990	1600	0.03	3990	1600			
4079	0.43	0.03	3990	3	3	0.03	3990	1600	0.03	3990	1600			
3555	0.49	0.04	3990	3	3	0.04	3990	1600	0.04	3990	1600			
3157	0.55	0.04	3990	3	3	0.04	3990	1600	0.04	3990	1600			
3015	0.58	0.04	3990	2	3	0.04	3990	1600	0.04	3990	1600			
2809	0.62	0.05	3990	2	3	0.05	3990	1600	0.05	3990	1600			
2635	0.66	0.05	3990	3	3	0.05	3990	1600	0.05	3990	1600			
2540	0.69	0.05	3990	2	3	0.05	3990	1600	0.05	3990	1600			
2380	0.74	0.06	3990	3	3	0.06	3990	1600	0.06	3990	1600			
2313	0.76	0.06	3990	2	3	0.06	3990	1600	0.06	3990	1600			
2062	0.85	0.06	3990	3	3	0.06	3990	1600	0.06	3990	1600			
2016	0.87	0.06	3990	2	3	0.06	3990	1600	0.06	3990	1600			
1821	0.96	0.07	3990	3	2	0.07	3990	1600	0.07	3990	1600			
1764	0.99	0.07	3990	2	3	0.07	3990	1600	0.07	3990	1600			
1759	0.99	0.07	3990	3	2	0.07	3990	1600	0.07	3990	1600			
1645	1.06	0.08	3990	3	2	0.08	3990	1600	0.08	3990	1600			
1538	1.14	0.08	3990	2	3	0.08	3990	1600	0.08	3990	1600			
1447	1.21	0.09	3990	3	2	0.09	3990	1600	0.09	3990	1600	0.09	3990	1600
1365	1.28	0.09	3990	2	3	0.09	3990	1600	0.09	3990	1600			
1330	1.32	0.10	3990	3	2	0.10	3990	1600	0.10	3990	1600	0.10	3990	1600
1194	1.47	0.11	3990	3	2	0.11	3990	1600	0.11	3990	1600	0.11	3990	1600
1112	1.57	0.12	3990	2	3	0.12	3990	1600	0.12	3990	1600			
1020	1.72	0.13	3990	3	2	0.13	3990	1600	0.13	3990	1600	0.13	3990	1600
1013	1.73	0.13	3990	2	3	0.13	3990	1600	0.13	3990	1600			
883	1.98	0.15	3990	2	3	0.15	3990	1600	0.15	3990	1600			
865	2.02	0.15	3990	3	2	0.15	3990	1600	0.15	3990	1600	0.15	3990	1600
784	2.23	0.17	3990	2	3	0.17	3990	1600	0.17	3990	1600			
686	2.55	0.19	3990	3	2	0.19	3990	1600	0.19	3990	1600	0.19	3990	1600
654	2.67	0.20	3990	2	3	0.20	3990	1600	0.20	3990	1600			
610	2.87	0.21	3990	2	3	0.21	3990	1600	0.21	3990	1600			
586	2.99	0.22	3990	3	2	0.22	3990	1600	0.22	3990	1600	0.22	3990	1600
543	3.22	0.24	3990	2	3	0.24	3990	1600	0.24	3990	1600			
496	3.52	0.26	3990	3	2	0.26	3990	1600	0.26	3990	1600	0.26	3990	1600
487	3.60	0.27	3990	2	3	0.27	3990	1600	0.27	3990	1600			
407	4.30	0.32	3990	3	2	0.32	3990	1600	0.32	3990	1600	0.32	3990	1600
402	4.35	0.32	3990	2	3	0.32	3990	1600	0.32	3990	1600			
371	4.72	0.34	3990	2	2	0.34	3990	1600	0.34	3990	1600	0.34	3990	1600
368	4.76	0.35	3990	3	2	0.35	3990	1600	0.35	3990	1600	0.35	3990	1600
330	5.30	0.38	3990	2	2	0.38	3990	1600	0.38	3990	1600	0.38	3990	1600
308	5.69	0.41	3990	2	2	0.41	3990	1600	0.41	3990	1600	0.41	3990	1600
276	6.33	0.46	3990	2	2	0.46	3990	1600	0.46	3990	1600	0.46	3990	1600
236	7.41	0.53	3990	2	2	0.53	3990	1600	0.53	3990	1600	0.53	3990	1600
215	8.15	0.59	3990	2	2	0.59	3990	1600	0.59	3990	1600	0.59	3990	1600
159	11.03	0.79	3990	2	2	0.75	3770	1600	0.79	3990	1600	0.79	3990	1600
145	12.03	0.86	3990	2	2	0.75	3460	1600	0.86	3990	1600	0.86	3990	1600
136	12.91	0.93	3990	2	2	0.75	3220	1600	0.93	3990	1600	0.93	3990	1600

Standard Contact with sales office Not available

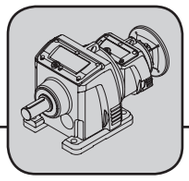

1750 Input Rpm

R67R37						AM56			AM143			AM145		
Ratio *i*	Output Speed n_a rpm	Input Power P_{emax} HP	Output Torque T_{amax} lb-in	Stages Pri.	Stages Sec.	Input Power P_e HP	Output Torque T_a lb-in	Output OHL F_{Ra} lb	Input Power P_e HP	Output Torque T_a lb-in	Output OHL F_{Ra} lb	Input Power P_e HP	Output Torque T_a lb-in	Output OHL F_{Ra} lb
15543	0.11	0.01	5320	3	3	0.01	5320	1700	0.01	5320	1700			
13400	0.13	0.01	5320	3	3	0.01	5320	1700	0.01	5320	1700			
11290	0.15	0.02	5320	3	3	0.02	5320	1700	0.02	5320	1700			
10282	0.17	0.02	5320	3	3	0.02	5320	1700	0.02	5320	1700			
9033	0.19	0.02	5320	3	3	0.02	5320	1700	0.02	5320	1700			
7843	0.22	0.02	5320	3	3	0.02	5320	1700	0.02	5320	1700			
6835	0.26	0.03	5320	3	3	0.03	5320	1700	0.03	5320	1700			
5868	0.30	0.03	5320	3	3	0.03	5320	1700	0.03	5320	1700			
5155	0.34	0.03	5320	3	3	0.03	5320	1700	0.03	5320	1700			
4503	0.39	0.04	5320	3	3	0.04	5320	1700	0.04	5320	1700			
3924	0.45	0.05	5320	3	3	0.05	5320	1700	0.05	5320	1700			
3485	0.50	0.05	5320	3	3	0.05	5320	1700	0.05	5320	1700			
2908	0.60	0.06	5320	3	3	0.06	5320	1700	0.06	5320	1700			
2545	0.69	0.07	5320	2	3	0.07	5320	1700	0.07	5320	1700			
2403	0.73	0.07	5320	3	3	0.07	5320	1700	0.07	5320	1700			
2180	0.80	0.08	5320	3	2	0.08	5320	1700	0.08	5320	1700			
2144	0.82	0.08	5320	2	3	0.08	5320	1700	0.08	5320	1700			
2010	0.87	0.09	5320	3	2	0.09	5320	1700	0.09	5320	1700			
1953	0.90	0.09	5320	2	3	0.09	5320	1700	0.09	5320	1700			
1851	0.95	0.09	5320	3	2	0.09	5320	1700	0.09	5320	1700			
1769	0.99	0.10	5320	3	2	0.10	5320	1700	0.10	5320	1700	0.10	5320	1700
1702	1.03	0.10	5320	2	3	0.10	5320	1700	0.10	5320	1700			
1635	1.07	0.11	5320	2	3	0.11	5320	1700	0.11	5320	1700			
1554	1.13	0.11	5320	3	2	0.11	5320	1700	0.11	5320	1700	0.11	5320	1700
1489	1.18	0.12	5320	2	3	0.12	5320	1700	0.12	5320	1700			
1468	1.19	0.12	5320	3	2	0.12	5320	1700	0.12	5320	1700	0.12	5320	1700
1318	1.33	0.13	5320	3	2	0.13	5320	1700	0.13	5320	1700	0.13	5320	1700
1298	1.35	0.13	5320	2	3	0.13	5320	1700	0.13	5320	1700			
1153	1.52	0.15	5320	2	3	0.15	5320	1700	0.15	5320	1700			
1126	1.55	0.15	5320	3	2	0.15	5320	1700	0.15	5320	1700	0.15	5320	1700
954	1.83	0.18	5320	3	2	0.18	5320	1700	0.18	5320	1700	0.18	5320	1700
939	1.86	0.18	5320	2	3	0.18	5320	1700	0.18	5320	1700			
855	2.05	0.20	5320	2	3	0.20	5320	1700	0.20	5320	1700			
839	2.09	0.21	5320	3	2	0.21	5320	1700	0.21	5320	1700	0.21	5320	1700
757	2.31	0.23	5320	3	2	0.23	5320	1700	0.23	5320	1700	0.23	5320	1700
745	2.35	0.23	5320	2	3	0.23	5320	1700	0.23	5320	1700			
662	2.64	0.26	5320	2	3	0.26	5320	1700	0.26	5320	1700			
646	2.71	0.27	5320	3	2	0.27	5320	1700	0.27	5320	1700	0.27	5320	1700
552	3.17	0.31	5320	2	3	0.31	5320	1700	0.31	5320	1700			
548	3.19	0.32	5320	3	2	0.32	5320	1700	0.32	5320	1700	0.32	5320	1700
487	3.60	0.36	5320	2	3	0.36	5320	1700	0.36	5320	1700			
449	3.89	0.38	5320	3	2	0.38	5320	1700	0.38	5320	1700	0.38	5320	1700
426	4.11	0.39	5320	2	2	0.39	5320	1700	0.39	5320	1700			
382	4.58	0.44	5320	2	2	0.44	5320	1700	0.44	5320	1700			
371	4.71	0.47	5320	3	2	0.47	5320	1700	0.47	5320	1700	0.47	5320	1700
336	5.21	0.50	5320	2	2	0.50	5320	1700	0.50	5320	1700	0.50	5320	1700
296	5.91	0.57	5320	2	2	0.57	5320	1700	0.57	5320	1700	0.57	5320	1700
279	6.28	0.60	5320	2	2	0.60	5320	1700	0.60	5320	1700	0.60	5320	1700
250	6.99	0.67	5320	2	2	0.67	5320	1700	0.67	5320	1700	0.67	5320	1700
221	7.94	0.76	5320	2	2	0.75	5240	1700	0.76	5320	1700	0.76	5320	1700
214	8.18	0.78	5320	2	2	0.75	5080	1700	0.78	5320	1700	0.78	5320	1700
181	9.65	0.93	5320	2	2	0.75	4310	1700	0.93	5320	1700	0.93	5320	1700
160	10.96	1.05	5320	2	2	0.75	3800	1700	1.00	5060	1700	1.05	5320	1700

Standard Contact with sales office Not available

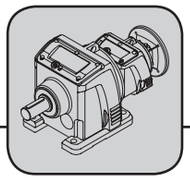

R77R37						AM56			AM143			AM145		
Ratio *i*	Output Speed n_a rpm	Input Power P_{emax} HP	Output Torque T_{amax} lb-in	Stages Pri.	Stages Sec.	Input Power P_e HP	Output Torque T_a lb-in	Output OHL F_{Ra} lb	Input Power P_e HP	Output Torque T_a lb-in	Output OHL F_{Ra} lb	Input Power P_e HP	Output Torque T_a lb-in	Output OHL F_{Ra} lb
16783	0.10	0.01	6640	3	3	0.01	6640	1940	0.01	6640	1940			
14831	0.12	0.02	6640	3	3	0.02	6640	1940	0.02	6640	1940			
13066	0.13	0.02	6640	3	3	0.02	6640	1940	0.02	6640	1940			
12497	0.14	0.02	6640	3	3	0.02	6640	1940	0.02	6640	1940			
11381	0.15	0.02	6640	3	3	0.02	6640	1940	0.02	6640	1940			
9918	0.18	0.02	6640	3	3	0.02	6640	1940	0.02	6640	1940			
8680	0.20	0.03	6640	3	3	0.03	6640	1940	0.03	6640	1940			
7565	0.23	0.03	6640	3	3	0.03	6640	1940	0.03	6640	1940			
6717	0.26	0.03	6640	3	3	0.03	6640	1940	0.03	6640	1940			
5918	0.30	0.04	6640	3	3	0.04	6640	1940	0.04	6640	1940			
4984	0.35	0.04	6640	3	3	0.04	6640	1940	0.04	6640	1940			
4343	0.40	0.05	6640	3	3	0.05	6640	1940	0.05	6640	1940			
3857	0.45	0.06	6640	3	3	0.06	6640	1940	0.06	6640	1940			
3225	0.54	0.07	6640	2	3	0.07	6640	1940	0.07	6640	1940			
3219	0.54	0.07	6640	3	3	0.07	6640	1940	0.07	6640	1940			
2836	0.62	0.08	6640	3	3	0.08	6640	1940	0.08	6640	1940			
2780	0.63	0.08	6640	2	3	0.08	6640	1940	0.08	6640	1940			
2419	0.72	0.09	6640	3	2	0.09	6640	1940	0.09	6640	1940			
2343	0.75	0.09	6640	2	3	0.09	6640	1940	0.09	6640	1940			
2225	0.79	0.10	6640	3	2	0.10	6640	1940	0.10	6640	1940			
2134	0.82	0.10	6640	2	3	0.10	6640	1940	0.10	6640	1940			
1958	0.89	0.11	6640	3	2	0.11	6640	1940	0.11	6640	1940	0.11	6640	1940
1859	0.94	0.12	6640	2	3	0.12	6640	1940	0.12	6640	1940			
1838	0.95	0.12	6640	3	2	0.12	6640	1940	0.12	6640	1940	0.12	6640	1940
1787	0.98	0.12	6640	2	3	0.12	6640	1940	0.12	6640	1940			
1627	1.08	0.13	6640	2	3	0.13	6640	1940	0.13	6640	1940			
1625	1.08	0.13	6640	3	2	0.13	6640	1940	0.13	6640	1940	0.13	6640	1940
1459	1.20	0.15	6640	3	2	0.15	6640	1940	0.15	6640	1940	0.15	6640	1940
1418	1.23	0.15	6640	2	3	0.15	6640	1940	0.15	6640	1940			
1259	1.39	0.17	6640	2	3	0.17	6640	1940	0.17	6640	1940			
1246	1.40	0.17	6640	3	2	0.17	6640	1940	0.17	6640	1940	0.17	6640	1940
1100	1.59	0.20	6640	2	3	0.20	6640	1940	0.20	6640	1940			
1056	1.66	0.20	6640	3	2	0.20	6640	1940	0.20	6640	1940	0.20	6640	1940
1026	1.71	0.21	6640	2	3	0.21	6640	1940	0.21	6640	1940			
934	1.87	0.23	6640	2	3	0.23	6640	1940	0.23	6640	1940			
931	1.88	0.23	6640	3	2	0.23	6640	1940	0.23	6640	1940	0.23	6640	1940
838	2.09	0.26	6640	3	2	0.26	6640	1940	0.26	6640	1940	0.26	6640	1940
814	2.15	0.27	6640	2	3	0.27	6640	1940	0.27	6640	1940			
723	2.42	0.30	6640	2	3	0.30	6640	1940	0.30	6640	1940			
715	2.45	0.30	6640	3	2	0.30	6640	1940	0.30	6640	1940	0.30	6640	1940
607	2.89	0.36	6640	3	2	0.36	6640	1940	0.36	6640	1940	0.36	6640	1940
603	2.90	0.36	6640	2	3	0.36	6640	1940	0.36	6640	1940			
561	3.12	0.39	6640	2	3	0.39	6640	1940	0.39	6640	1940			
534	3.27	0.40	6640	3	2	0.40	6640	1940	0.40	6640	1940	0.40	6640	1940
515	3.40	0.41	6640	2	2	0.41	6640	1940	0.41	6640	1940			
497	3.52	0.43	6640	3	2	0.43	6640	1940	0.43	6640	1940	0.43	6640	1940
465	3.76	0.45	6640	2	2	0.45	6640	1940	0.45	6640	1940			
438	3.99	0.49	6640	3	2	0.49	6640	1940	0.49	6640	1940	0.49	6640	1940
417	4.20	0.50	6640	2	2	0.50	6640	1940	0.50	6640	1940			
371	4.71	0.58	6640	3	2	0.58	6640	1940	0.58	6640	1940	0.58	6640	1940
367	4.77	0.57	6640	2	2	0.57	6640	1940	0.57	6640	1940	0.57	6640	1940
315	5.56	0.69	6640	3	2	0.69	6640	1940	0.69	6640	1940	0.69	6640	1940
305	5.75	0.69	6640	2	2	0.69	6640	1940	0.69	6640	1940	0.69	6640	1940
273	6.40	0.77	6640	2	2	0.75	6500	1940	0.77	6640	1940	0.77	6640	1940
234	7.49	0.90	6640	2	2	0.75	5550	1940	0.90	6640	1940	0.90	6640	1940
198	8.84	1.06	6640	2	2	0.75	4710	1940	1.00	6280	1940	1.06	6640	1940

Standard Contact with sales office Not available

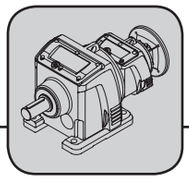

1750 Input Rpm

R87R57						AM56			AM143			AM145		
Ratio *i*	Output Speed n_a rpm	Input Power P_{emax} HP	Output Torque T_{amax} lb-in	Stages Pri.	Stages Sec.	Input Power P_e HP	Output Torque T_a lb-in	Output OHL F_{Ra} lb	Input Power P_e HP	Output Torque T_a lb-in	Output OHL F_{Ra} lb	Input Power P_e HP	Output Torque T_a lb-in	Output OHL F_{Ra} lb
17276	0.10	0.03	13730	3	3	0.03	13730	3800	0.03	13730	3800			
15969	0.11	0.03	13730	3	3	0.03	13730	3800	0.03	13730	3800			
14323	0.12	0.03	13730	3	3	0.03	13730	3800	0.03	13730	3800			
12340	0.14	0.04	13730	3	3	0.04	13730	3800	0.04	13730	3800			
11271	0.16	0.04	13730	3	3	0.04	13730	3800	0.04	13730	3800			
10125	0.17	0.05	13730	3	3	0.05	13730	3800	0.05	13730	3800			
9248	0.19	0.05	13730	3	3	0.05	13730	3800	0.05	13730	3800			
8021	0.22	0.06	13730	3	3	0.06	13730	3800	0.06	13730	3800			
7195	0.24	0.06	13730	3	3	0.06	13730	3800	0.06	13730	3800			
6332	0.28	0.07	13730	3	3	0.07	13730	3800	0.07	13730	3800			
5659	0.31	0.08	13730	3	3	0.08	13730	3800	0.08	13730	3800			
4718	0.37	0.10	13730	3	3	0.10	13730	3800	0.10	13730	3800			
3707	0.47	0.12	13730	3	3	0.12	13730	3800	0.12	13730	3800			
3329	0.53	0.14	13730	3	3	0.14	13730	3800	0.14	13730	3800			
3228	0.54	0.14	13730	2	3	0.14	13730	3800	0.14	13730	3800			
2948	0.59	0.15	13730	2	3	0.15	13730	3800	0.15	13730	3800			
2821	0.62	0.16	13730	3	3	0.16	13730	3800	0.16	13730	3800	0.16	13730	3800
2577	0.68	0.17	13730	2	3	0.17	13730	3800	0.17	13730	3800			
2410	0.73	0.19	13730	3	3	0.19	13730	3800	0.19	13730	3800	0.19	13730	3800
2323	0.75	0.19	13730	2	3	0.19	13730	3800	0.19	13730	3800			
2216	0.79	0.21	13730	3	3	0.21	13730	3800	0.21	13730	3800	0.21	13730	3800
2098	0.83	0.21	13730	2	3	0.21	13730	3800	0.21	13730	3800			
1977	0.89	0.23	13730	3	3	0.23	13730	3800	0.23	13730	3800	0.23	13730	3800
1882	0.93	0.24	13730	2	3	0.24	13730	3800	0.24	13730	3800			
1818	0.96	0.25	13730	2	3	0.25	13730	3800	0.25	13730	3800			
1656	1.06	0.27	13730	2	3	0.27	13730	3800	0.27	13730	3800			
1641	1.07	0.27	13730	3	2	0.27	13730	3800	0.27	13730	3800	0.27	13730	3800
1480	1.18	0.30	13730	2	3	0.30	13730	3800	0.30	13730	3800			
1374	1.27	0.33	13730	2	3	0.33	13730	3800	0.33	13730	3800			
1355	1.29	0.33	13730	3	2	0.33	13730	3800	0.33	13730	3800	0.33	13730	3800
1234	1.42	0.36	13730	2	3	0.36	13730	3800	0.36	13730	3800			
1112	1.57	0.40	13730	3	2	0.40	13730	3800	0.40	13730	3800	0.40	13730	3800
1054	1.66	0.42	13730	2	3	0.42	13730	3800	0.42	13730	3800			
1006	1.74	0.44	13730	3	2	0.44	13730	3800	0.44	13730	3800	0.44	13730	3800
970	1.80	0.47	13730	3	3	0.47	13730	3800	0.47	13730	3800	0.47	13730	3800
916	1.91	0.49	13730	2	3	0.49	13730	3800	0.49	13730	3800			
876	2.00	0.53	13730	3	3	0.53	13730	3800	0.53	13730	3800	0.53	13730	3800
842	2.08	0.53	13730	2	3	0.53	13730	3800	0.53	13730	3800			
826	2.12	0.54	13730	3	2	0.54	13730	3800	0.54	13730	3800	0.54	13730	3800
756	2.31	0.59	13730	2	3	0.59	13730	3800	0.59	13730	3800			
735	2.38	0.61	13730	3	2	0.61	13730	3800	0.61	13730	3800	0.61	13730	3800
641	2.73	0.70	13730	2	3	0.70	13730	3800	0.70	13730	3800	0.70	13730	3800
632	2.77	0.71	13730	3	2	0.71	13730	3800	0.71	13730	3800	0.71	13730	3800
590	2.96	0.76	13730	3	2							0.76	13730	3800
548	3.20	0.82	13730	2	3	0.75	12630	3800	0.82	13730	3800	0.82	13730	3800
538	3.26	0.81	13730	2	2	0.75	12780	3800	0.81	13730	3800			
522	3.35	0.86	13730	3	2	0.75	12030	3800	0.86	13730	3800	0.86	13730	3800
494	3.55	0.91	13730	3	2	0.75	11380	3800	0.91	13730	3800	0.91	13730	3800
479	3.66	0.91	13730	2	2	0.75	11370	3800	0.91	13730	3800			
440	3.98	1.02	13730	3	2	0.75	10140	3800	1.00	13510	3800	1.02	13730	3800
412	4.24	1.05	13730	2	2	0.75	9800	3800	1.00	13070	3800			
378	4.63	1.18	13730	3	2	0.75	8710	3800	1.00	11610	3800	1.18	13730	3800
360	4.86	1.20	13730	2	2	0.75	8560	3800	1.00	11410	3800			
312	5.61	1.43	13730	3	2	0.75	7190	3800	1.00	9590	3800	1.43	13730	3800
308	5.68	1.41	13730	2	2	0.75	7320	3800	1.00	9760	3800	1.41	13730	3800
263	6.65	1.70	13730	3	2	0.75	6070	3800	1.00	8090	3800	1.70	13730	3800
263	6.65	1.65	13730	2	2	0.75	6250	3800	1.00	8340	3800	1.65	13730	3800
231	7.57	1.93	13730	3	2	0.75	5330	3800	1.00	7110	3800	1.93	13730	3800
229	7.65	1.90	13730	2	2	0.75	5430	3800	1.00	7250	3800	1.90	13730	3800
202	8.67	2.15	13730	2	2	0.75	4800	3800	1.00	6400	3800	2.00	12800	3800
200	8.74	2.23	13730	3	2							2.00	12310	3800

Standard Contact with sales office Not available

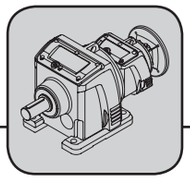

R87R57						AM182			AM184		
Ratio *i*	Output Speed n_a rpm	Input Power P_{emax} HP	Output Torque T_{amax} lb-in	Stages Pri.	Stages Sec.	Input Power P_e HP	Output Torque T_a lb-in	Output OHL F_{Ra} lb	Input Power P_e HP	Output Torque T_a lb-in	Output OHL F_{Ra} lb
1006	1.74	0.44	13730	3	2	0.44	13730	3800	0.44	13730	3800
826	2.12	0.54	13730	3	2	0.54	13730	3800	0.54	13730	3800
735	2.38	0.61	13730	3	2	0.61	13730	3800	0.61	13730	3800
632	2.77	0.71	13730	3	2	0.71	13730	3800	0.71	13730	3800
590	2.96	0.76	13730	3	2	0.76	13730	3800	0.76	13730	3800
522	3.35	0.86	13730	3	2	0.86	13730	3800	0.86	13730	3800
494	3.55	0.91	13730	3	2	0.91	13730	3800	0.91	13730	3800
440	3.98	1.02	13730	3	2	1.02	13730	3800	1.02	13730	3800
378	4.63	1.18	13730	3	2	1.18	13730	3800	1.18	13730	3800
312	5.61	1.43	13730	3	2	1.43	13730	3800	1.43	13730	3800
263	6.65	1.70	13730	3	2	1.70	13730	3800	1.70	13730	3800
263	6.65	1.65	13730	2	2	1.65	13730	3800	1.65	13730	3800
231	7.57	1.93	13730	3	2	1.93	13730	3800	1.93	13730	3800
229	7.65	1.90	13730	2	2	1.90	13730	3800	1.90	13730	3800
202	8.67	2.15	13730	2	2	2.15	13730	3800			
200	8.74	2.23	13730	3	2	2.23	13730	3800	2.23	13730	3800

Standard Contact with sales office Not available

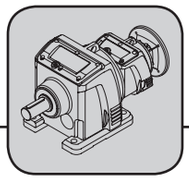

1750 Input Rpm

R97R57						AM56			AM143			AM145		
Ratio *i*	Output Speed n_a rpm	Input Power P_{emax} HP	Output Torque T_{amax} lb-in	Stages Pri.	Stages Sec.	Input Power P_e HP	Output Torque T_a lb-in	Output OHL F_{Ra} lb	Input Power P_e HP	Output Torque T_a lb-in	Output OHL F_{Ra} lb	Input Power P_e HP	Output Torque T_a lb-in	Output OHL F_{Ra} lb
20389	0.09	0.04	26580	3	3	0.04	26580	4070	0.04	26580	4070			
18287	0.10	0.05	26580	3	3	0.05	26580	4070	0.05	26580	4070			
15755	0.11	0.06	26580	3	3	0.06	26580	4070	0.06	26580	4070			
14391	0.12	0.06	26580	3	3	0.06	26580	4070	0.06	26580	4070			
12580	0.14	0.07	26580	3	3	0.07	26580	4070	0.07	26580	4070			
11339	0.15	0.08	26580	3	3	0.08	26580	4070	0.08	26580	4070			
10241	0.17	0.09	26580	3	3	0.09	26580	4070	0.09	26580	4070			
8875	0.20	0.10	26580	3	3	0.10	26580	4070	0.10	26580	4070			
7786	0.22	0.11	26580	3	3	0.11	26580	4070	0.11	26580	4070			
6709	0.26	0.13	26580	3	3	0.13	26580	4070	0.13	26580	4070			
6024	0.29	0.15	26580	3	3	0.15	26580	4070	0.15	26580	4070			
5146	0.34	0.17	26580	3	3	0.17	26580	4070	0.17	26580	4070			
4666	0.38	0.19	26580	2	3	0.19	26580	4070	0.19	26580	4070			
4514	0.39	0.20	26580	3	3	0.20	26580	4070	0.20	26580	4070			
4262	0.41	0.20	26580	2	3	0.20	26580	4070	0.20	26580	4070			
4018	0.44	0.22	26580	3	3	0.22	26580	4070	0.22	26580	4070			
3726	0.47	0.23	26580	2	3	0.23	26580	4070	0.23	26580	4070			
3477	0.50	0.26	26580	3	3	0.26	26580	4070	0.26	26580	4070			
3006	0.58	0.29	26580	3	2	0.29	26580	4070	0.29	26580	4070			
3002	0.58	0.29	26580	2	3	0.29	26580	4070	0.29	26580	4070			
2816	0.62	0.31	26580	3	2	0.31	26580	4070	0.31	26580	4070			
2675	0.65	0.32	26580	2	3	0.32	26580	4070	0.32	26580	4070			
2397	0.73	0.36	26580	2	3	0.36	26580	4070	0.36	26580	4070			
2336	0.75	0.37	26580	3	2	0.37	26580	4070	0.37	26580	4070			
2161	0.81	0.40	26580	2	3	0.40	26580	4070	0.40	26580	4070			
2095	0.84	0.41	26580	3	2	0.41	26580	4070	0.41	26580	4070	0.41	26580	4070
1838	0.95	0.47	26580	3	2	0.47	26580	4070	0.47	26580	4070	0.47	26580	4070
1750	1.00	0.49	26580	2	3	0.49	26580	4070	0.49	26580	4070			
1730	1.01	0.50	26580	3	2	0.50	26580	4070	0.50	26580	4070	0.50	26580	4070
1691	1.03	0.51	26580	2	3	0.51	26580	4070	0.51	26580	4070			
1553	1.13	0.56	26580	3	2	0.56	26580	4070	0.56	26580	4070	0.56	26580	4070
1541	1.14	0.56	26580	2	3	0.56	26580	4070	0.56	26580	4070			
1402	1.25	0.62	26580	3	2	0.62	26580	4070	0.62	26580	4070			
1377	1.27	0.63	26580	2	3	0.63	26580	4070	0.63	26580	4070			
1285	1.36	0.67	26580	3	2	0.67	26580	4070	0.67	26580	4070	0.67	26580	4070
1278	1.37	0.68	26580	2	3	0.68	26580	4070	0.68	26580	4070			
1099	1.59	0.79	26580	2	3	0.75	25350	4070	0.79	26580	4070			
1091	1.60	0.79	26580	3	2	0.75	25140	4070	0.79	26580	4070	0.79	26580	4070
980	1.78	0.88	26580	2	3	0.75	22600	4070	0.88	26580	4070			
952	1.84	0.91	26580	3	2	0.75	21950	4070	0.91	26580	4070	0.91	26580	4070
917	1.91	0.94	26580	2	3	0.75	21140	4070	0.94	26580	4070			
835	2.09	1.04	26580	3	2	0.75	19260	4070	1.00	25680	4070	1.04	26580	4070
810	2.16	1.07	26580	2	3	0.75	18670	4070	1.00	24890	4070			
768	2.28	1.13	26580	3	2	0.75	17710	4070	1.00	23610	4070	1.13	26580	4070
733	2.39	1.18	26580	2	3	0.75	16900	4070	1.00	22530	4070			
674	2.60	1.28	26580	3	2	0.75	15540	4070	1.00	20720	4070	1.28	26580	4070
610	2.87	1.37	26580	2	2	0.75	14500	4070	1.00	19330	4070			
588	2.97	1.47	26580	3	2	0.75	13570	4070	1.00	18090	4070	1.47	26580	4070
547	3.20	1.53	26580	2	2	0.75	13000	4070	1.00	17340	4070	1.53	26580	4070
500	3.50	1.73	26580	3	2	0.75	11520	4070	1.00	15360	4070	1.73	26580	4070
452	3.87	1.86	26580	2	2	0.75	10740	4070	1.00	14320	4070	1.86	26580	4070
436	4.01	1.98	26580	3	2	0.75	10060	4070	1.00	13410	4070	1.98	26580	4070
384	4.56	2.25	26580	3	2							2.00	23590	4070
380	4.60	2.20	26580	2	2							2.00	24110	4070
336	5.22	2.50	26580	2	2							2.00	21260	4070
335	5.22	2.58	26580	3	2							2.00	20590	4070
293	5.96	2.95	26580	3	2							2.00	18040	4070
284	6.16	2.95	26580	2	2									
245	7.15	3.43	26580	2	2							2.00	15510	4070
241	7.25	3.58	26580	3	2							2.00	14840	4070
228	7.69	3.69	26580	2	2							2.00	14420	4070
207	8.44	4.17	26580	3	2							2.00	12740	4070

Standard Contact with sales office Not available

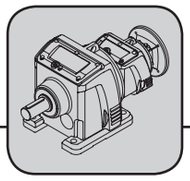

R97R57						AM182			AM184		
Ratio *i*	Output Speed n_a rpm	Input Power P_{emax} HP	Output Torque T_{amax} lb-in	Stages Pri.	Stages Sec.	Input Power P_e HP	Output Torque T_a lb-in	Output OHL F_{Ra} lb	Input Power P_e HP	Output Torque T_a lb-in	Output OHL F_{Ra} lb
1285	1.36	0.67	26580	3	2	0.67	26580	4070	0.67	26580	4070
1091	1.60	0.79	26580	3	2	0.79	26580	4070	0.79	26580	4070
952	1.84	0.91	26580	3	2	0.91	26580	4070	0.91	26580	4070
835	2.09	1.04	26580	3	2	1.04	26580	4070	1.04	26580	4070
768	2.28	1.13	26580	3	2	1.13	26580	4070	1.13	26580	4070
674	2.60	1.28	26580	3	2	1.28	26580	4070	1.28	26580	4070
588	2.97	1.47	26580	3	2	1.47	26580	4070	1.47	26580	4070
500	3.50	1.73	26580	3	2	1.73	26580	4070	1.73	26580	4070
436	4.01	1.98	26580	3	2	1.98	26580	4070	1.98	26580	4070
384	4.56	2.25	26580	3	2	2.25	26580	4070	2.25	26580	4070
380	4.60	2.20	26580	2	2	2.20	26580	4070	2.20	26580	4070
336	5.22	2.50	26580	2	2	2.50	26580	4070	2.50	26580	4070
335	5.22	2.58	26580	3	2	2.58	26580	4070	2.58	26580	4070
293	5.96	2.95	26580	3	2	2.95	26580	4070	2.95	26580	4070
245	7.15	3.43	26580	2	2	3.00	23270	4070	3.43	26580	4070
241	7.25	3.58	26580	3	2	3.00	22260	4070	3.58	26580	4070
228	7.69	3.69	26580	2	2	3.00	21630	4070	3.69	26580	4070
207	8.44	4.17	26580	3	2	3.00	19110	4070	4.17	26580	4070

Standard Contact with sales office Not available

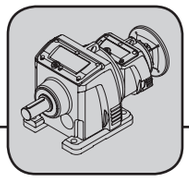

1750 Input Rpm

R107R77						AM56			AM143			AM145			AM182		
Ratio *i*	Output Speed n_a rpm	Input Power P_{emax} HP	Output Torque T_{amax} lb-in	Stages Pri.	Stages Sec.	Input Power P_e HP	Output Torque T_a lb-in	Output OHL F_{Ra} lb	Input Power P_e HP	Output Torque T_a lb-in	Output OHL F_{Ra} lb	Input Power P_e HP	Output Torque T_a lb-in	Output OHL F_{Ra} lb	Input Power P_e HP	Output Torque T_a lb-in	Output OHL F_{Ra} lb
20068	0.09	0.06	38100	3	3	0.06	38100	6630	0.06	38100	6630						
17519	0.10	0.07	38100	3	3	0.07	38100	6630	0.07	38100	6630						
14495	0.12	0.09	38100	3	3	0.09	38100	6630	0.09	38100	6630						
12810	0.14	0.10	38100	3	3	0.10	38100	6630	0.10	38100	6630						
11285	0.16	0.11	38100	3	3	0.11	38100	6630	0.11	38100	6630						
9251	0.19	0.14	38100	3	3	0.14	38100	6630	0.14	38100	6630						
8718	0.20	0.15	38100	3	3	0.15	38100	6630	0.15	38100	6630						
7767	0.23	0.16	38100	3	3	0.16	38100	6630	0.16	38100	6630						
6765	0.26	0.19	38100	3	3	0.19	38100	6630	0.19	38100	6630						
5947	0.29	0.21	38100	3	3							0.21	38100	6630			
4993	0.35	0.26	38100	3	3							0.26	38100	6630			
4605	0.38	0.28	38100	3	3							0.28	38100	6630			
4049	0.43	0.32	38100	3	3							0.32	38100	6630	0.32	38100	6630
3816	0.46	0.33	38100	3	3							0.33	38100	6630	0.33	38100	6630
3701	0.47	0.33	38100	2	3	0.33	38100	6630	0.33	38100	6630						
3400	0.51	0.38	38100	3	3							0.38	38100	6630	0.38	38100	6630
3349	0.52	0.37	38100	2	3	0.37	38100	6630	0.37	38100	6630						
3062	0.57	0.40	38100	2	3	0.40	38100	6630	0.40	38100	6630						
2961	0.59	0.43	38100	3	3							0.43	38100	6630	0.43	38100	6630
2706	0.65	0.46	38100	2	3	0.46	38100	6630	0.46	38100	6630						
2683	0.65	0.48	38100	3	3							0.48	38100	6630	0.48	38100	6630
2384	0.73	0.52	38100	2	3	0.52	38100	6630	0.52	38100	6630						
2330	0.75	0.55	38100	3	3							0.55	38100	6630	0.55	38100	6630
1955	0.90	0.63	38100	2	3	0.63	38100	6630	0.63	38100	6630						
1862	0.94	0.67	38100	3	2							0.67	38100	6630	0.67	38100	6630
1842	0.95	0.67	38100	2	3	0.67	38100	6630	0.67	38100	6630						
1788	0.98	0.69	38100	2	3	0.69	38100	6630	0.69	38100	6630						
1590	1.10	0.78	38100	2	3							0.78	38100	6630			
1528	1.15	0.81	38100	3	2										0.81	38100	6630
1361	1.29	0.91	38100	3	2										0.91	38100	6630
1256	1.39	0.99	38100	2	3							0.99	38100	6630			
1221	1.43	1.02	38100	3	2												
1159	1.51	1.07	38100	2	3	0.75	26720	6630	1.00	35620	6630	1.07	38100	6630			
1124	1.56	1.10	38100	3	2												
1021	1.71	1.21	38100	2	3							1.21	38100	6630	1.21	38100	6630
949	1.84	1.31	38100	3	2												
856	2.05	1.45	38100	2	3							1.45	38100	6630	1.45	38100	6630
806	2.17	1.54	38100	2	3							1.54	38100	6630	1.54	38100	6630
796	2.20	1.56	38100	3	2												
696	2.51	1.78	38100	2	3										1.78	38100	6630
596	2.94	2.08	38100	3	2												
550	3.18	2.25	38100	2	3										2.25	38100	6630
492	3.56	2.52	38100	3	2												
441	3.97	2.73	38100	2	2							2.00	27960	6630	2.73	38100	6630
415	4.22	2.99	38100	3	2												
393	4.45	3.06	38100	2	2							2.00	24940	6630	3.00	37410	6630
349	5.02	3.56	38100	3	2												
335	5.22	3.59	38100	2	2							2.00	21240	6630	3.00	31860	6630
300	5.83	4.13	38100	3	2												
289	6.05	4.16	38100	2	2												
253	6.90	4.89	38100	3	2												
237	7.37	5.06	38100	2	2												
225	7.79	5.35	38100	2	2												
214	8.19	5.80	38100	3	2												
200	8.73	6.00	38100	2	2												
190	9.21	6.33	38100	2	2										3.00	18060	6630
189	9.27	6.57	38100	3	2												
170	10.27	7.06	38100	2	2												

Standard Contact with sales office Not available

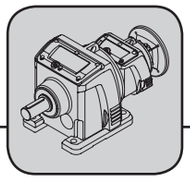

R107R77						AM184			AM213			AM215		
Ratio *i*	Output Speed n_a rpm	Input Power P_{emax} HP	Output Torque T_{amax} lb-in	Stages Pri.	Stages Sec.	Input Power P_e HP	Output Torque T_a lb-in	Output OHL F_{Ra} lb	Input Power P_e HP	Output Torque T_a lb-in	Output OHL F_{Ra} lb	Input Power P_e HP	Output Torque T_a lb-in	Output OHL F_{Ra} lb
1528	1.15	0.81	38100	3	2	0.81	38100	6630						
1361	1.29	0.91	38100	3	2	0.91	38100	6630	0.91	38100	6630	0.91	38100	6630
1221	1.43	1.02	38100	3	2	1.02	38100	6630	1.02	38100	6630	1.02	38100	6630
1124	1.56	1.10	38100	3	2	1.10	38100	6630	1.10	38100	6630	1.10	38100	6630
949	1.84	1.31	38100	3	2	1.31	38100	6630	1.31	38100	6630	1.31	38100	6630
796	2.20	1.56	38100	3	2	1.56	38100	6630	1.56	38100	6630	1.56	38100	6630
696	2.51	1.78	38100	2	3	1.78	38100	6630						
596	2.94	2.08	38100	3	2	2.08	38100	6630	2.08	38100	6630	2.08	38100	6630
550	3.18	2.25	38100	2	3	2.25	38100	6630						
492	3.56	2.52	38100	3	2	2.52	38100	6630	2.52	38100	6630	2.52	38100	6630
415	4.22	2.99	38100	3	2	2.99	38100	6630	2.99	38100	6630	2.99	38100	6630
349	5.02	3.56	38100	3	2	3.56	38100	6630	3.56	38100	6630	3.56	38100	6630
300	5.83	4.13	38100	3	2	4.13	38100	6630	4.13	38100	6630	4.13	38100	6630
289	6.05	4.16	38100	2	2	4.16	38100	6630	4.16	38100	6630	4.16	38100	6630
253	6.90	4.89	38100	3	2	4.89	38100	6630	4.89	38100	6630	4.89	38100	6630
237	7.37	5.06	38100	2	2	5.00	37630	6630	5.06	38100	6630	5.06	38100	6630
225	7.79	5.35	38100	2	2	5.00	35600	6630	5.35	38100	6630	5.35	38100	6630
214	8.19	5.80	38100	3	2	5.00	32830	6630	5.80	38100	6630	5.80	38100	6630
200	8.73	6.00	38100	2	2	5.00	31750	6630	6.00	38100	6630	6.00	38100	6630
190	9.21	6.33	38100	2	2	5.00	30100	6630	6.33	38100	6630	6.33	38100	6630
189	9.27	6.57	38100	3	2	5.00	29010	6630	6.57	38100	6630	6.57	38100	6630
170	10.27	7.06	38100	2	2	5.00	27000	6630	7.06	38100	6630	7.06	38100	6630

Standard Contact with sales office Not available

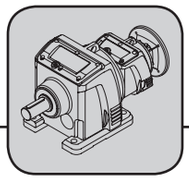

1750 Input Rpm

R137R77						AM56			AM143			AM145			AM182		
Ratio *i*	Output Speed n_a rpm	Input Power P_{emax} HP	Output Torque T_{amax} lb-in	Stages Pri.	Stages Sec.	Input Power P_e HP	Output Torque T_a lb-in	Output OHL F_{Ra} lb	Input Power P_e HP	Output Torque T_a lb-in	Output OHL F_{Ra} lb	Input Power P_e HP	Output Torque T_a lb-in	Output OHL F_{Ra} lb	Input Power P_e HP	Output Torque T_a lb-in	Output OHL F_{Ra} lb
22840	0.08	0.09	62020	3	3	0.09	62020	8430	0.09	62020	8430						
19938	0.09	0.10	62020	3	3	0.10	62020	8430	0.10	62020	8430						
18041	0.10	0.12	62020	3	3	0.12	62020	8430	0.12	62020	8430						
16497	0.11	0.13	62020	3	3	0.13	62020	8430	0.13	62020	8430						
14579	0.12	0.14	62020	3	3	0.14	62020	8430	0.14	62020	8430						
12843	0.14	0.16	62020	3	3	0.16	62020	8430	0.16	62020	8430						
10529	0.17	0.20	62020	3	3	0.20	62020	8430	0.20	62020	8430						
8565	0.20	0.24	62020	3	3							0.24	62020	8430			
7280	0.24	0.29	62020	3	3							0.29	62020	8430			
6769	0.26	0.31	62020	3	3							0.31	62020	8430			
6243	0.28	0.33	62020	3	3	0.33	62020	8430	0.33	62020	8430	0.33	62020	8430			
5739	0.30	0.36	62020	3	3	0.36	62020	8430	0.36	62020	8430	0.36	62020	8430			
5056	0.35	0.41	62020	3	3							0.41	62020	8430	0.41	62020	8430
4568	0.38	0.44	62020	2	3	0.44	62020	8430	0.44	62020	8430						
4237	0.41	0.49	62020	3	3							0.49	62020	8430	0.49	62020	8430
3993	0.44	0.52	62020	3	3							0.52	62020	8430	0.52	62020	8430
3988	0.44	0.51	62020	2	3	0.51	62020	8430	0.51	62020	8430						
3608	0.49	0.56	62020	2	3	0.56	62020	8430	0.56	62020	8430						
3447	0.51	0.60	62020	3	3										0.60	62020	8430
3299	0.53	0.61	62020	2	3	0.61	62020	8430	0.61	62020	8430						
2930	0.60	0.71	62020	3	3										0.71	62020	8430
2916	0.60	0.69	62020	2	3	0.69	62020	8430	0.69	62020	8430						
2733	0.64	0.74	62020	3	2							0.74	62020	8430	0.74	62020	8430
2569	0.68	0.79	62020	2	3	0.75	59220	8430	0.79	62020	8430						
2513	0.70	0.80	62020	3	2							0.80	62020	8430	0.80	62020	8430
2323	0.75	0.87	62020	3	2							0.87	62020	8430	0.87	62020	8430
2120	0.83	0.95	62020	3	2							0.95	62020	8430	0.95	62020	8430
2106	0.83	0.96	62020	2	3	0.75	48550	8430	0.96	62020	8430						
1824	0.96	1.11	62020	2	3	0.75	42060	8430	1.00	56080	8430						
1802	0.97	1.12	62020	3	2							1.12	62020	8430	1.12	62020	8430
1713	1.02	1.18	62020	2	3							1.18	62020	8430			
1575	1.11	1.28	62020	2	3							1.28	62020	8430			
1549	1.13	1.30	62020	3	2										1.30	62020	8430
1389	1.26	1.45	62020	3	2												
1354	1.29	1.49	62020	2	3							1.49	62020	8430			
1279	1.37	1.58	62020	3	2												
1249	1.40	1.62	62020	2	3	0.75	28780	8430	1.00	38380	8430	1.62	62020	8430			
1100	1.59	1.83	62020	2	3							1.83	62020	8430	1.83	62020	8430
1080	1.62	1.87	62020	3	2												
922	1.90	2.19	62020	2	3							2.00	56670	8430	2.19	62020	8430
918	1.91	2.20	62020	3	2												
869	2.01	2.32	62020	2	3							2.00	53400	8430	2.32	62020	8430
834	2.10	2.42	62020	3	2												
750	2.33	2.69	62020	2	3							2.00	46100	8430	2.69	62020	8430
728	2.40	2.77	62020	3	2												
689	2.54	2.93	62020	2	3							2.00	42380	8430	2.93	62020	8430
678	2.58	2.98	62020	3	2												
560	3.13	3.60	62020	3	2												
547	3.20	3.58	62020	2	2							2.00	34640	8430	3.00	51970	8430
503	3.48	3.89	62020	2	2							2.00	31850	8430	3.00	47780	8430
473	3.70	4.27	62020	3	2												
434	4.03	4.64	62020	3	2												
424	4.13	4.62	62020	2	2							2.00	26870	8430	3.00	40300	8430
390	4.49	5.02	62020	2	2							2.00	24700	8430	3.00	37060	8430
369	4.74	5.46	62020	3	2												
348	5.03	5.63	62020	2	2										3.00	33070	8430
319	5.49	6.33	62020	3	2												
310	5.65	6.32	62020	2	2										3.00	29450	8430
285	6.14	6.87	62020	2	2										3.00	27080	8430
284	6.17	7.12	62020	3	2												
238	7.34	8.46	62020	3	2												
202	8.66	9.99	62020	3	2												
179	9.76	11.25	62020	3	2												

Standard | Contact with sales office | Not available

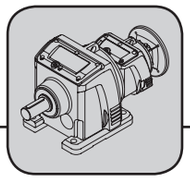

R137R77						AM184			AM213			AM215		
Ratio *i*	Output Speed n_a rpm	Input Power P_{emax} HP	Output Torque T_{amax} lb-in	Stages Pri.	Stages Sec.	Input Power P_e HP	Output Torque T_a lb-in	Output OHL F_{Ra} lb	Input Power P_e HP	Output Torque T_a lb-in	Output OHL F_{Ra} lb	Input Power P_e HP	Output Torque T_a lb-in	Output OHL F_{Ra} lb
3447	0.51	0.60	62020	3	3	0.60	62020	8430						
2930	0.60	0.71	62020	3	3	0.71	62020	8430						
1549	1.13	1.30	62020	3	2	1.30	62020	8430	1.30	62020	8430	2.69	62020	8430
1389	1.26	1.45	62020	3	2	1.45	62020	8430	1.45	62020	8430	2.93	62020	8430
1279	1.37	1.58	62020	3	2	1.58	62020	8430	1.58	62020	8430	0.80	62020	8430
1080	1.62	1.87	62020	3	2	1.87	62020	8430	1.87	62020	8430	1.12	62020	8430
918	1.91	2.20	62020	3	2	2.20	62020	8430	2.20	62020	8430	1.45	62020	8430
834	2.10	2.42	62020	3	2	2.42	62020	8430	2.42	62020	8430	1.87	62020	8430
750	2.33	2.69	62020	2	3	2.69	62020	8430						
728	2.40	2.77	62020	3	2	2.77	62020	8430	2.77	62020	8430	2.42	62020	8430
689	2.54	2.93	62020	2	3	2.93	62020	8430						
678	2.58	2.98	62020	3	2	2.98	62020	8430	2.98	62020	8430	2.98	62020	8430
560	3.13	3.60	62020	3	2	3.60	62020	8430	3.60	62020	8430	3.60	62020	8430
473	3.70	4.27	62020	3	2	4.27	62020	8430	4.27	62020	8430	5.46	62020	8430
434	4.03	4.64	62020	3	2	4.64	62020	8430	4.64	62020	8430	6.33	62020	8430
369	4.74	5.46	62020	3	2	5.00	56760	8430	5.46	62020	8430	9.99	62020	8430
348	5.03	5.63	62020	2	2	5.00	55120	8430						
319	5.49	6.33	62020	3	2	5.00	48970	8430	6.33	62020	8430	3.58	62020	8430
310	5.65	6.32	62020	2	2	5.00	49090	8430	6.32	62020	8430	3.89	62020	8430
285	6.14	6.87	62020	2	2	5.00	45130	8430	6.87	62020	8430	4.62	62020	8430
284	6.17	7.12	62020	3	2	5.00	43580	8430	7.12	62020	8430	5.02	62020	8430
238	7.34	8.46	62020	3	2	5.00	36630	8430	7.50	54950	8430	5.63	62020	8430
202	8.66	9.99	62020	3	2	5.00	31050	8430	7.50	46580	8430	6.32	62020	8430
179	9.76	11.25	62020	3	2	5.00	27560	8430	7.50	41340	8430	6.87	62020	8430

Standard Contact with sales office Not available

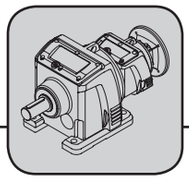

1750 Input Rpm

R147R77						AM56			AM143			AM145			AM182		
Ratio *i*	Output Speed n_a rpm	Input Power P_{emax} HP	Output Torque T_{amax} lb-in	Stages Pri.	Stages Sec.	Input Power P_e HP	Output Torque T_a lb-in	Output OHL F_{Ra} lb	Input Power P_e HP	Output Torque T_a lb-in	Output OHL F_{Ra} lb	Input Power P_e HP	Output Torque T_a lb-in	Output OHL F_{Ra} lb	Input Power P_e HP	Output Torque T_a lb-in	Output OHL F_{Ra} lb
22847	0.08	0.17	115180	3	3	0.17	115180	14090	0.17	115180	14090						
21238	0.08	0.18	115180	3	3	0.18	115180	14090	0.18	115180	14090						
18540	0.09	0.21	115180	3	3	0.21	115180	14090	0.21	115180	14090						
16776	0.10	0.23	115180	3	3	0.23	115180	14090	0.23	115180	14090						
15340	0.11	0.25	115180	3	3	0.25	115180	14090	0.25	115180	14090						
13556	0.13	0.28	115180	3	3	0.28	115180	14090	0.28	115180	14090						
11942	0.15	0.32	115180	3	3	0.32	115180	14090	0.32	115180	14090						
9791	0.18	0.39	115180	3	3	0.39	115180	14090	0.39	115180	14090						
8415	0.21	0.46	115180	3	3	0.46	115180	14090	0.46	115180	14090						
7264	0.24	0.53	115180	3	3							0.53	115180	14090			
6294	0.28	0.61	115180	3	3							0.61	115180	14090			
5294	0.33	0.73	115180	3	3	0.73	115180	14090	0.73	115180	14090	0.73	115180	14090			
4664	0.38	0.83	115180	3	3							0.83	115180	14090	0.83	115180	14090
4038	0.43	0.96	115180	3	3							0.96	115180	14090	0.96	115180	14090
3486	0.50	1.11	115180	3	3										1.11	115180	14090
2873	0.61	1.34	115180	3	3										1.34	115180	14090
2541	0.69	1.47	115180	3	2							1.47	115180	14090	1.47	115180	14090
2318	0.75	1.62	115180	3	2							1.62	115180	14090	1.62	115180	14090
1971	0.89	1.90	115180	3	2							1.90	115180	14090	1.90	115180	14090
1798	0.97	2.08	115180	3	2							2.00	110520	14090	2.08	115180	14090
1617	1.08	2.32	115180	3	2										2.32	115180	14090
1440	1.21	2.60	115180	3	2										2.60	115180	14090
1292	1.35	2.90	115180	3	2												
1190	1.47	3.15	115180	3	2												
1004	1.74	3.73	115180	3	2												
839	2.09	4.47	115180	3	2												
716	2.45	5.24	115180	3	2												
630	2.78	5.94	115180	3	2												
521	3.36	7.20	115180	3	2												
520	3.37	7.21	115180	3	2												
475	3.68	7.89	115180	3	2												
429	4.08	8.73	115180	3	2												
414	4.23	9.05	115180	3	2												

R147R77						AM184			AM213			AM215		
Ratio *i*	Output Speed n_a rpm	Input Power P_{emax} HP	Output Torque T_{amax} lb-in	Stages Pri.	Stages Sec.	Input Power P_e HP	Output Torque T_a lb-in	Output OHL F_{Ra} lb	Input Power P_e HP	Output Torque T_a lb-in	Output OHL F_{Ra} lb	Input Power P_e HP	Output Torque T_a lb-in	Output OHL F_{Ra} lb
3486	0.50	1.11	115180	3	3	1.11	115180	14090						
2873	0.61	1.34	115180	3	3	1.34	115180	14090						
1617	1.08	2.32	115180	3	2	2.32	115180	14090						
1440	1.21	2.60	115180	3	2	2.60	115180	14090	2.60	115180	14090	2.60	115180	14090
1292	1.35	2.90	115180	3	2	2.90	115180	14090	2.90	115180	14090	2.90	115180	14090
1190	1.47	3.15	115180	3	2	3.15	115180	14090	3.15	115180	14090	3.15	115180	14090
1004	1.74	3.73	115180	3	2	3.73	115180	14090	3.73	115180	14090	3.73	115180	14090
839	2.09	4.47	115180	3	2	4.47	115180	14090	4.47	115180	14090	4.47	115180	14090
716	2.45	5.24	115180	3	2	5.00	109990	14090	5.24	115180	14090	5.24	115180	14090
630	2.78	5.94	115180	3	2	5.00	96900	14090	5.94	115180	14090	5.94	115180	14090
521	3.36	7.20	115180	3	2	5.00	80030	14090	7.20	115180	14090	7.20	115180	14090
520	3.37	7.21	115180	3	2	5.00	79860	14090	7.21	115180	14090	7.21	115180	14090
475	3.68	7.89	115180	3	2	5.00	73000	14090	7.50	109490	14090	7.89	115180	14090
429	4.08	8.73	115180	3	2	5.00	65960	14090	7.50	98940	14090	8.73	115180	14090
414	4.23	9.05	115180	3	2	5.00	63650	14090	7.50	95480	14090	9.05	115180	14090

Standard Contact with sales office Not available

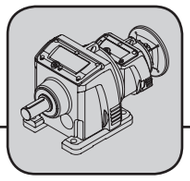

R147R87						AM184			AM213			AM215		
Ratio *i*	Output Speed n_a rpm	Input Power P_{emax} HP	Output Torque T_{amax} lb-in	Stages Pri.	Stages Sec.	Input Power P_e HP	Output Torque T_a lb-in	Output OHL F_{Ra} lb	Input Power P_e HP	Output Torque T_a lb-in	Output OHL F_{Ra} lb	Input Power P_e HP	Output Torque T_a lb-in	Output OHL F_{Ra} lb
515	3.40	7.27	115180	3	2	5.00	79190	14090	7.27	115180	14090	7.27	115180	14090
442	3.96	8.47	115180	3	2	5.00	67980	14090	7.50	101970	14090	8.47	115180	14090
403	4.34	9.29	115180	3	2	5.00	62010	14090	7.50	93010	14090	9.29	115180	14090
365	4.80	10.28	115180	3	2	5.00	56030	14090	7.50	84040	14090	10.00	112060	14090
335	5.23	11.20	115180	3	2	5.00	51420	14090	7.50	77130	14090	10.00	102840	14090
287	6.09	13.05	115180	3	2	5.00	44140	14090	7.50	66220	14090	10.00	88290	14090
245	7.14	15.30	115180	3	2	5.00	37650	14090	7.50	56480	14090	10.00	75300	14090
213	8.23	17.63	115180	3	2	5.00	32670	14090	7.50	49000	14090	10.00	65340	14090
182	9.59	20.53	115180	3	2	5.00	28050	14090	7.50	42070	14090	10.00	56090	14090
169	10.35	22.15	115180	3	2	5.00	26000	14090	7.50	39000	14090	10.00	52000	14090

R147R87						AM254			AM256		
Ratio *i*	Output Speed n_a rpm	Input Power P_{emax} HP	Output Torque T_{amax} lb-in	Stages Pri.	Stages Sec.	Input Power P_e HP	Output Torque T_a lb-in	Output OHL F_{Ra} lb	Input Power P_e HP	Output Torque T_a lb-in	Output OHL F_{Ra} lb
515	3.40	7.27	115180	3	2	7.27	115180	14090	7.27	115180	14090
442	3.96	8.47	115180	3	2	8.47	115180	14090	8.47	115180	14090
403	4.34	9.29	115180	3	2	9.29	115180	14090	9.29	115180	14090
365	4.80	10.28	115180	3	2	10.28	115180	14090	10.28	115180	14090
335	5.23	11.20	115180	3	2	11.20	115180	14090	11.20	115180	14090
287	6.09	13.05	115180	3	2	13.05	115180	14090	13.05	115180	14090
245	7.14	15.30	115180	3	2	15.00	112950	14090	15.30	115180	14090
213	8.23	17.63	115180	3	2	15.00	98010	14090	17.63	115180	14090
182	9.59	20.53	115180	3	2	15.00	84140	14090	20.00	112180	14090
169	10.35	22.15	115180	3	2	15.00	78000	14090	20.00	103990	14090

Standard Contact with sales office Not available

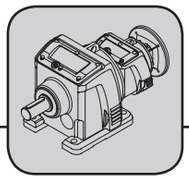

1750 Input Rpm

R167R97						AM182			AM184			AM213			AM215		
Ratio *i*	Output Speed n_a rpm	Input Power P_{emax} HP	Output Torque T_{amax} lb-in	Stages Pri.	Stages Sec.	Input Power P_e HP	Output Torque T_a lb-in	Output OHL F_{Ra} lb	Input Power P_e HP	Output Torque T_a lb-in	Output OHL F_{Ra} lb	Input Power P_e HP	Output Torque T_a lb-in	Output OHL F_{Ra} lb	Input Power P_e HP	Output Torque T_a lb-in	Output OHL F_{Ra} lb
27788	0.06	0.19	159480	3	3	0.19	159480	19820									
22010	0.08	0.24	159480	3	3	0.24	159480	19820									
20220	0.09	0.26	159480	3	3	0.26	159480	19820									
17569	0.10	0.30	159480	3	3	0.30	159480	19820									
15513	0.11	0.34	159480	3	3	0.34	159480	19820	0.34	159480	19820						
14023	0.12	0.38	159480	3	3	0.38	159480	19820	0.38	159480	19820						
12244	0.14	0.44	159480	3	3				0.44	159480	19820						
11324	0.15	0.47	159480	3	3				0.47	159480	19820						
10394	0.17	0.51	159480	3	3				0.51	159480	19820						
9379	0.19	0.57	159480	3	3				0.57	159480	19820	0.57	159480	19820	0.57	159480	19820
8539	0.20	0.63	159480	3	3				0.63	159480	19820	0.63	159480	19820	0.63	159480	19820
7897	0.22	0.68	159480	3	3				0.68	159480	19820	0.68	159480	19820	0.68	159480	19820
6952	0.25	0.77	159480	3	3				0.77	159480	19820	0.77	159480	19820	0.77	159480	19820
6050	0.29	0.88	159480	3	3				0.88	159480	19820	0.88	159480	19820	0.88	159480	19820
5578	0.31	0.96	159480	3	3				0.96	159480	19820	0.96	159480	19820	0.96	159480	19820
4505	0.39	1.19	159480	3	3				1.19	159480	19820	1.19	159480	19820	1.19	159480	19820
4118	0.42	1.30	159480	3	3				1.30	159480	19820	1.30	159480	19820	1.30	159480	19820
3591	0.49	1.49	159480	3	3				1.49	159480	19820	1.49	159480	19820	1.49	159480	19820
3049	0.57	1.75	159480	3	3				1.75	159480	19820	1.75	159480	19820	1.75	159480	19820
2581	0.68	2.01	159480	3	2							2.01	159480	19820	2.01	159480	19820
2367	0.74	2.19	159480	3	2							2.19	159480	19820	2.19	159480	19820
2061	0.85	2.52	159480	3	2							2.52	159480	19820	2.52	159480	19820
1863	0.94	2.78	159480	3	2							2.78	159480	19820	2.78	159480	19820
1648	1.06	3.15	159480	3	2							3.15	159480	19820	3.15	159480	19820
1490	1.17	3.48	159480	3	2							3.48	159480	19820	3.48	159480	19820
1216	1.44	4.27	159480	3	2												
1032	1.70	5.03	159480	3	2							5.03	159480	19820	5.03	159480	19820
933	1.88	5.56	159480	3	2							5.56	159480	19820	5.56	159480	19820
825	2.12	6.29	159480	3	2							6.29	159480	19820	6.29	159480	19820
745	2.35	6.96	159480	3	2							6.96	159480	19820	6.96	159480	19820
659	2.65	7.87	159480	3	2							7.50	151970	19820	7.87	159480	19820
551	3.18	9.41	159480	3	2							7.50	127060	19820	9.41	159480	19820
478	3.66	10.85	159480	3	2							7.50	110220	19820	10.00	146960	19820
411	4.26	12.63	159480	3	2							7.50	94700	19820	10.00	126260	19820
378	4.62	13.71	159480	3	2							7.50	87260	19820	10.00	116340	19820
328	5.33	15.80	159480	3	2							7.50	75700	19820	10.00	100940	19820
287	6.09	18.06	159480	3	2							7.50	66230	19820	10.00	88310	19820

Standard Contact with sales office Not available

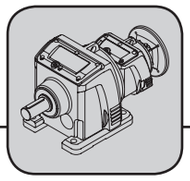

R167R97						AM254			AM256			AM284		
Ratio *i*	Output Speed n_a rpm	Input Power P_{emax} HP	Output Torque T_{amax} lb-in	Stages Pri.	Stages Sec.	Input Power P_e HP	Output Torque T_a lb-in	Output OHL F_{Ra} lb	Input Power P_e HP	Output Torque T_a lb-in	Output OHL F_{Ra} lb	Input Power P_e HP	Output Torque T_a lb-in	Output OHL F_{Ra} lb
3049	0.57	1.75	159480	3	3	1.75	159480	19820	1.75	159480	19820			
2581	0.68	2.01	159480	3	2	2.01	159480	19820	2.01	159480	19820			
2367	0.74	2.19	159480	3	2	2.19	159480	19820	2.19	159480	19820	2.19	159480	19820
2061	0.85	2.52	159480	3	2	2.52	159480	19820	2.52	159480	19820	2.52	159480	19820
1863	0.94	2.78	159480	3	2	2.78	159480	19820	2.78	159480	19820	2.78	159480	19820
1648	1.06	3.15	159480	3	2	3.15	159480	19820	3.15	159480	19820	3.15	159480	19820
1490	1.17	3.48	159480	3	2	3.48	159480	19820	3.48	159480	19820	3.48	159480	19820
1216	1.44	4.27	159480	3	2	4.27	159480	19820	4.27	159480	19820	4.27	159480	19820
1032	1.70	5.03	159480	3	2	5.03	159480	19820	5.03	159480	19820			
933	1.88	5.56	159480	3	2	5.56	159480	19820	5.56	159480	19820			
825	2.12	6.29	159480	3	2	6.29	159480	19820	6.29	159480	19820	6.29	159480	19820
745	2.35	6.96	159480	3	2	6.96	159480	19820	6.96	159480	19820	6.96	159480	19820
659	2.65	7.87	159480	3	2	7.87	159480	19820	7.87	159480	19820	7.87	159480	19820
551	3.18	9.41	159480	3	2	9.41	159480	19820	9.41	159480	19820	9.41	159480	19820
478	3.66	10.85	159480	3	2	10.85	159480	19820	10.85	159480	19820	10.85	159480	19820
411	4.26	12.63	159480	3	2	12.63	159480	19820	12.63	159480	19820	12.63	159480	19820
378	4.62	13.71	159480	3	2	13.71	159480	19820	13.71	159480	19820	13.71	159480	19820
328	5.33	15.80	159480	3	2	15.00	151410	19820	15.80	159480	19820	15.80	159480	19820
287	6.09	18.06	159480	3	2	15.00	132460	19820	18.06	159480	19820	18.06	159480	19820

Standard Contact with sales office Not available

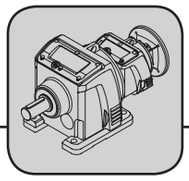

1750 Input Rpm

R167R107						AM182			AM184			AM213			AM215		
Ratio *i*	Output Speed n_a rpm	Input Power P_{emax} HP	Output Torque T_{amax} lb-in	Stages Pri.	Stages Sec.	Input Power P_e HP	Output Torque T_a lb-in	Output OHL F_{Ra} lb	Input Power P_e HP	Output Torque T_a lb-in	Output OHL F_{Ra} lb	Input Power P_e HP	Output Torque T_a lb-in	Output OHL F_{Ra} lb	Input Power P_e HP	Output Torque T_a lb-in	Output OHL F_{Ra} lb
2747	0.64	1.89	159480	2	3	1.89	159480	19820	1.89	159480	19820	1.89	159480	19820	1.89	159480	19820
2539	0.69	2.04	159480	2	3	2.04	159480	19820	2.04	159480	19820	2.04	159480	19820	2.04	159480	19820
2450	0.71	2.12	159480	2	3							2.12	159480	19820	2.12	159480	19820
2297	0.76	2.26	159480	2	3	2.26	159480	19820	2.26	159480	19820	2.26	159480	19820	2.26	159480	19820
2057	0.85	2.52	159480	2	3							2.52	159480	19820	2.52	159480	19820
1901	0.92	2.73	159480	2	3							2.73	159480	19820	2.73	159480	19820
1624	1.08	3.20	159480	2	3							3.20	159480	19820	3.20	159480	19820
1496	1.17	3.47	159480	2	3							3.47	159480	19820	3.47	159480	19820
1358	1.29	3.82	159480	2	3							3.82	159480	19820	3.82	159480	19820
1261	1.39	4.12	159480	2	3							4.12	159480	19820	4.12	159480	19820
1058	1.65	4.90	159480	2	3							4.90	159480	19820	4.90	159480	19820
940	1.86	5.52	159480	2	3							5.52	159480	19820	5.52	159480	19820
814	2.15	6.37	159480	2	3												
695	2.52	7.46	159480	2	3												
607	2.88	8.55	159480	2	3												
518	3.38	10.01	159480	2	3												
485	3.61	10.37	159480	2	2												
385	4.55	13.08	159480	2	2												
353	4.96	14.69	159480	3	2												
333	5.25	15.10	159480	2	2												
291	6.01	17.83	159480	3	2												
286	6.12	17.60	159480	2	2												
272	6.43	19.05	159480	3	2												
248	7.05	20.26	159480	2	2												
221	7.91	23.44	159480	3	2												
208	8.43	24.23	159480	2	2												
197	8.87	26.30	159480	3	2												
165	10.63	30.57	159480	2	2												
158	11.06	32.78	159480	3	2												

Standard Contact with sales office Not available

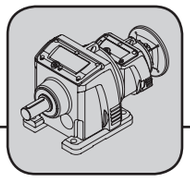

R167R107						AM254			AM256			AM284			AM286		
Ratio *i*	Output Speed n_a rpm	Input Power P_{emax} HP	Output Torque T_{amax} lb-in	Stages Pri.	Stages Sec.	Input Power P_e HP	Output Torque T_a lb-in	Output OHL F_{Ra} lb	Input Power P_e HP	Output Torque T_a lb-in	Output OHL F_{Ra} lb	Input Power P_e HP	Output Torque T_a lb-in	Output OHL F_{Ra} lb	Input Power P_e HP	Output Torque T_a lb-in	Output OHL F_{Ra} lb
1496	1.17	3.47	159480	2	3	3.47	159480	19820	3.47	159480	19820	3.47	159480	19820	3.47	159480	19820
1261	1.39	4.12	159480	2	3	4.12	159480	19820	4.12	159480	19820	4.12	159480	19820	4.12	159480	19820
1058	1.65	4.90	159480	2	3	4.90	159480	19820	4.90	159480	19820	4.90	159480	19820	4.90	159480	19820
940	1.86	5.52	159480	2	3	5.52	159480	19820	5.52	159480	19820	5.52	159480	19820	5.52	159480	19820
814	2.15	6.37	159480	2	3	6.37	159480	19820	6.37	159480	19820	6.37	159480	19820	6.37	159480	19820
695	2.52	7.46	159480	2	3	7.46	159480	19820	7.46	159480	19820	7.46	159480	19820	7.46	159480	19820
607	2.88	8.55	159480	2	3	8.55	159480	19820	8.55	159480	19820	8.55	159480	19820	8.55	159480	19820
518	3.38	10.01	159480	2	3	10.01	159480	19820	10.01	159480	19820	10.01	159480	19820	10.01	159480	19820
485	3.61	10.37	159480	2	2	10.37	159480	19820	10.37	159480	19820	10.37	159480	19820	10.37	159480	19820
385	4.55	13.08	159480	2	2	13.08	159480	19820	13.08	159480	19820	13.08	159480	19820	13.08	159480	19820
353	4.96	14.69	159480	3	2	14.69	159480	19820	14.69	159480	19820	14.69	159480	19820	14.69	159480	19820
333	5.25	15.10	159480	2	2	15.00	158410	19820	15.10	159480	19820	15.10	159480	19820	15.10	159480	19820
291	6.01	17.83	159480	3	2	15.00	134160	19820	17.83	159480	19820	17.83	159480	19820	17.83	159480	19820
286	6.12	17.60	159480	2	2	15.00	135900	19820	17.60	159480	19820	17.60	159480	19820	17.60	159480	19820
272	6.43	19.05	159480	3	2	15.00	125570	19820	19.05	159480	19820	19.05	159480	19820	19.05	159480	19820
248	7.05	20.26	159480	2	2	15.00	118070	19820	20.00	157420	19820	20.26	159480	19820	20.26	159480	19820
221	7.91	23.44	159480	3	2	15.00	102040	19820	20.00	136060	19820	23.44	159480	19820	23.44	159480	19820
208	8.43	24.23	159480	2	2	15.00	98710	19820	20.00	131620	19820	24.23	159480	19820	24.23	159480	19820
197	8.87	26.30	159480	3	2	15.00	90960	19820	20.00	121270	19820	25.00	151590	19820	26.30	159480	19820
165	10.63	30.57	159480	2	2	15.00	78270	19820	20.00	104350	19820	25.00	130440	19820	30.00	156530	19820
158	11.06	32.78	159480	3	2	15.00	72980	19820	20.00	97300	19820	25.00	121630	19820	30.00	145950	19820

R167R107						AM324			AM326		
Ratio *i*	Output Speed n_a rpm	Iutput Power P_{emax} HP	Output Torque T_{amax} lb-in	Stages Pri.	Stages Sec.	Iutput Power P_e HP	Output Torque T_a lb-in	Output OHL F_{Ra} lb	Iutput Power P_e HP	Output Torque T_a lb-in	Output OHL F_{Ra} lb
940	1.86	5.52	159480	2	3	5.52	159480	19820	5.52	159480	19820
814	2.15	6.37	159480	2	3	6.37	159480	19820	6.37	159480	19820
695	2.52	7.46	159480	2	3	7.46	159480	19820	7.46	159480	19820
607	2.88	8.55	159480	2	3	8.55	159480	19820	8.55	159480	19820
518	3.38	10.01	159480	2	3	10.01	159480	19820	10.01	159480	19820
485	3.61	10.37	159480	2	2	10.37	159480	19820	10.37	159480	19820
385	4.55	13.08	159480	2	2	13.08	159480	19820	13.08	159480	19820
353	4.96	14.69	159480	3	2	14.69	159480	19820	14.69	159480	19820
333	5.25	15.10	159480	2	2	15.10	159480	19820	15.10	159480	19820
291	6.01	17.83	159480	3	2	17.83	159480	19820	17.83	159480	19820
286	6.12	17.60	159480	2	2	17.60	159480	19820	17.60	159480	19820
272	6.43	19.05	159480	3	2	19.05	159480	19820	19.05	159480	19820
248	7.05	20.26	159480	2	2	20.26	159480	19820	20.26	159480	19820
221	7.91	23.44	159480	3	2	23.44	159480	19820	23.44	159480	19820
208	8.43	24.23	159480	2	2	24.23	159480	19820	24.23	159480	19820
197	8.87	26.30	159480	3	2	26.30	159480	19820	26.30	159480	19820
165	10.63	30.57	159480	2	2	30.57	159480	19820	30.57	159480	19820
158	11.06	32.78	159480	3	2	32.78	159480	19820	32.78	159480	19820

Standard Contact with sales office Not available

3.4 Dimension Sheets

R type

MHN17

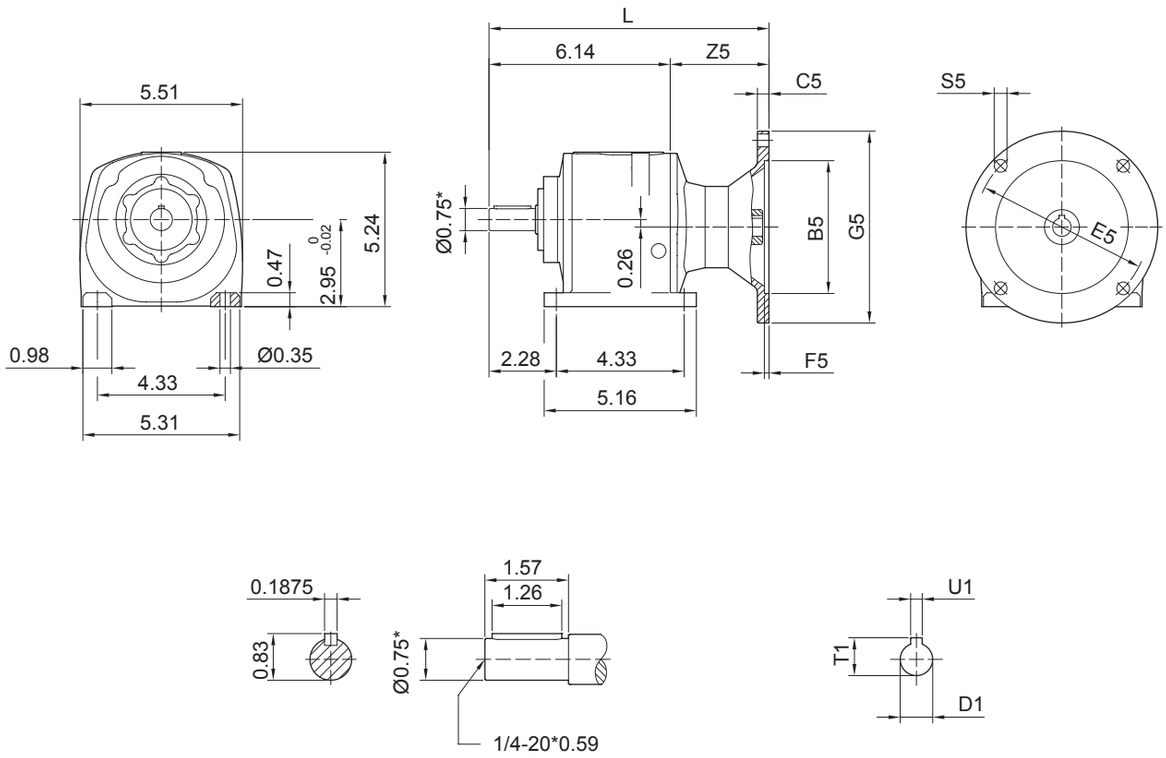

*Refer page17 for tolerance information.
For the dimension concerning the solid input shaft, please refer to the table shown at page86.

Frame	B5	C5	E5	F5	G5	L	S5	Z5	D1	T1	U1
AM56	4.50	0.39	5.875	0.16	6.50	9.48	0.43	3.34	0.625	0.71	0.188

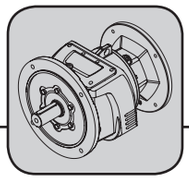

MVN17

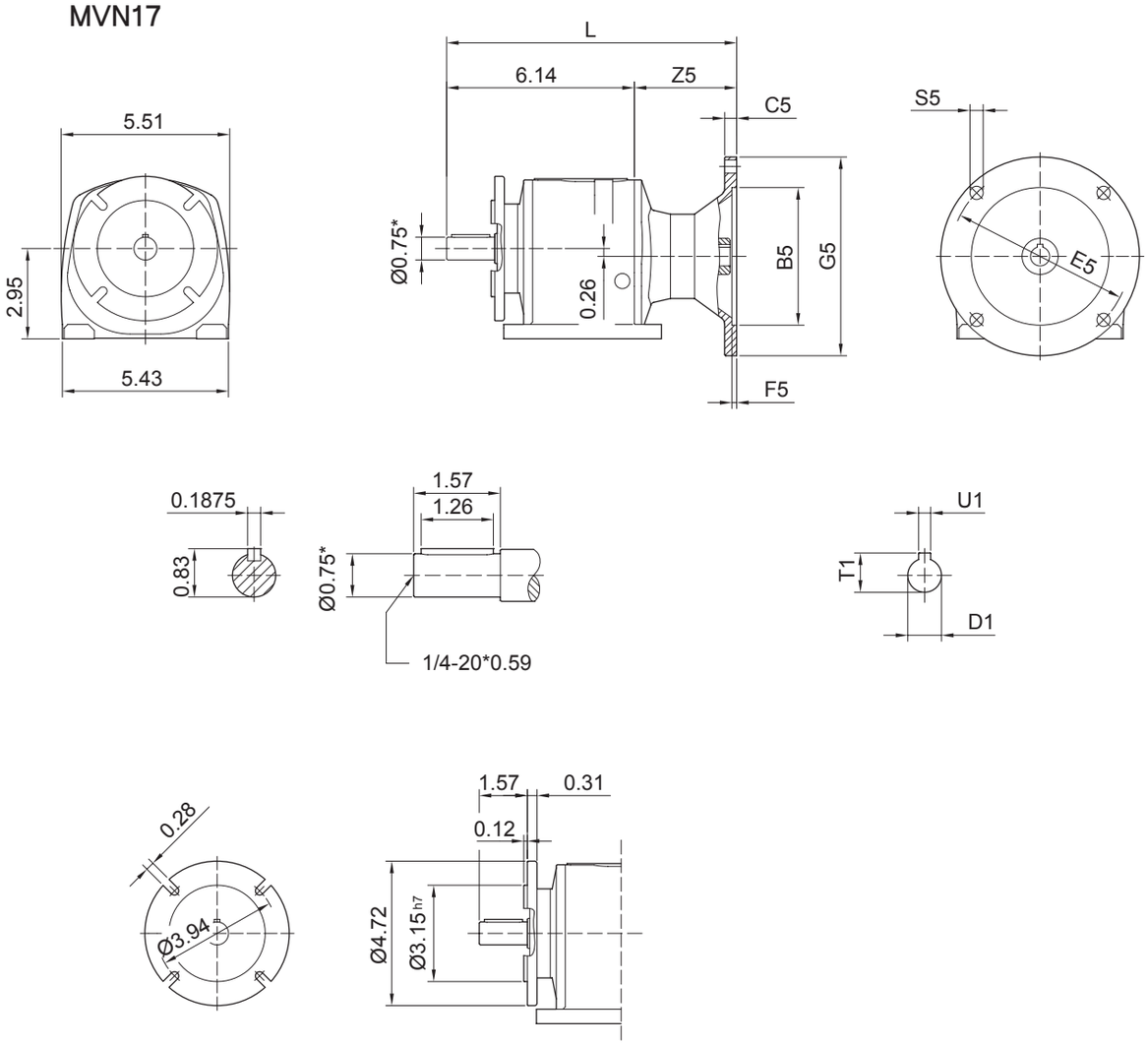

*Refer page17 for tolerance information.
For the dimension concerning the solid input shaft, please refer to the table shown at page86.

Frame	B5	C5	E5	F5	G5	L	S5	Z5	D1	T1	U1
AM56	4.50	0.39	5.875	0.16	6.50	9.48	0.43	3.34	0.625	0.71	0.188

LHN37

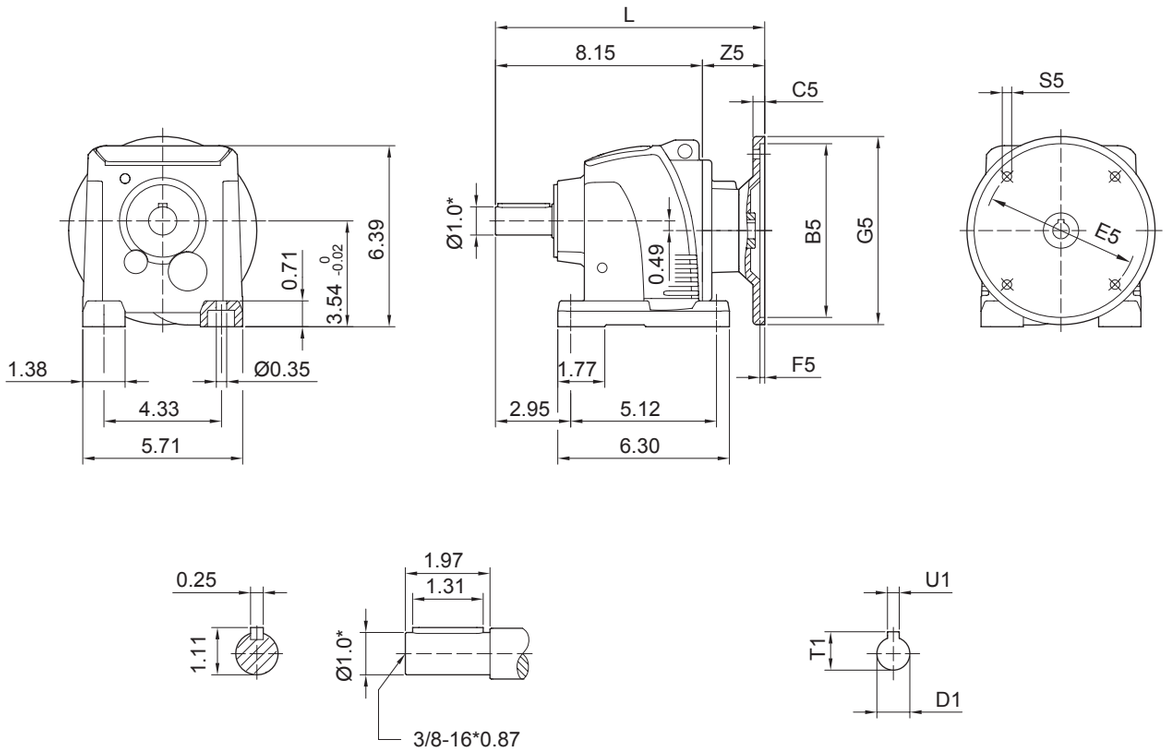

*Refer page17 for tolerance information.

For the dimension concerning the solid input shaft, please refer to the table shown at page 84.

Frame	B5	C5	E5	F5	G5	L	S5	Z5	D1	T1	U1
AM56	4.50	0.39	5.875	0.16	6.50	10.55	0.41	2.40	0.625	0.71	0.188
AM143/145	4.50	0.47	5.875	0.20	6.50	10.94	0.41	2.80	0.875	0.97	0.188

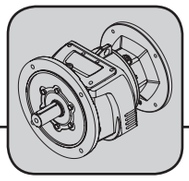

L..N37

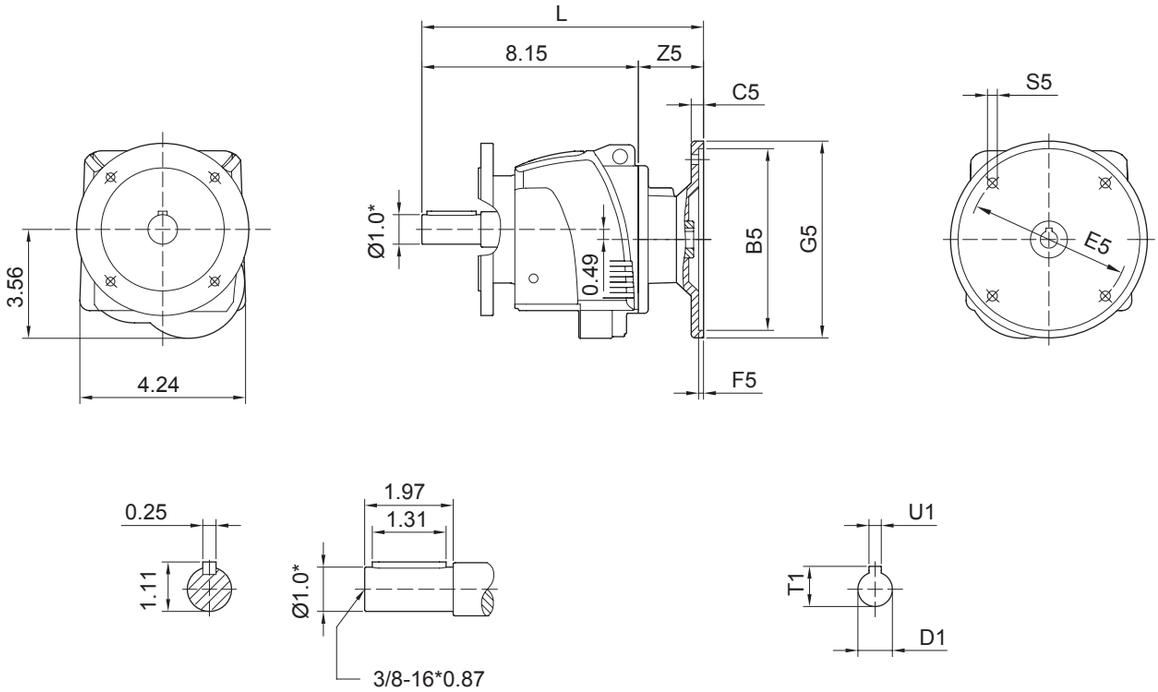

LVN37

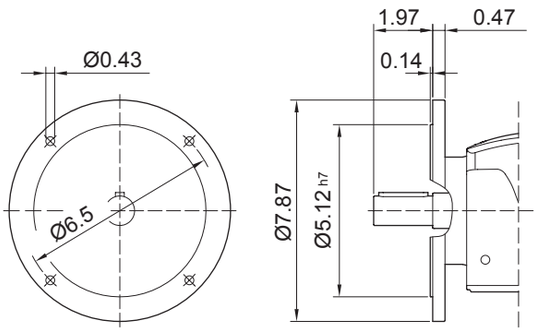

LWN37

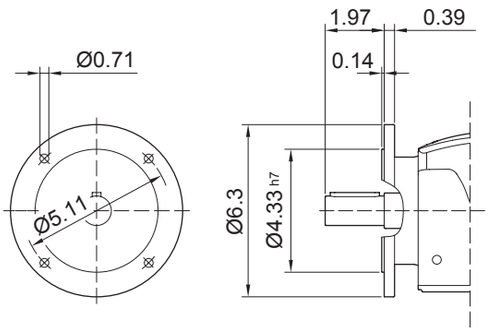

*Refer page17 for tolerance information.

For the dimension concerning the solid input shaft, please refer to the table shown at page 84.

Frame	B5	C5	E5	F5	G5	L	S5	Z5	D1	T1	U1
AM56	4.50	0.39	5.875	0.16	6.50	10.55	0.41	2.40	0.625	0.71	0.188
AM143/145	4.50	0.47	5.875	0.20	6.50	10.94	0.41	2.80	0.875	0.97	0.188

LHN47

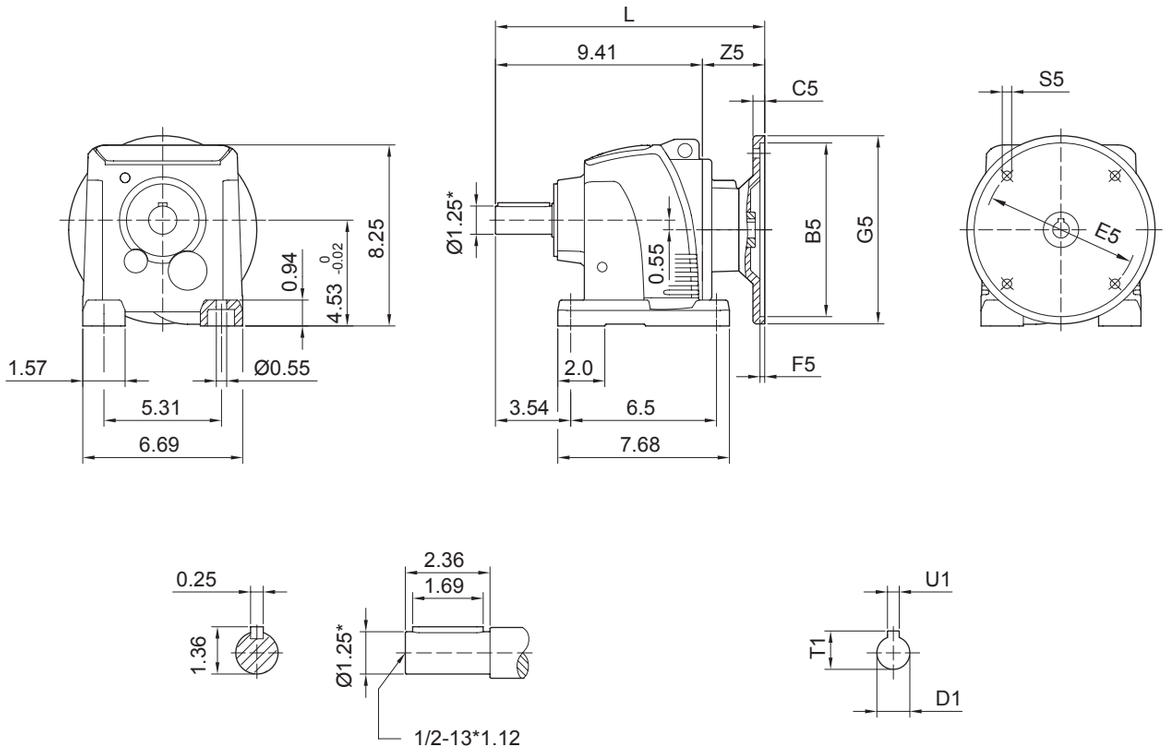

*Refer page17 for tolerance information.

For the dimension concerning the solid input shaft, please refer to the table shown at page84.

Frame	B5	C5	E5	F5	G5	L	S5	Z5	D1	T1	U1
AM56	4.50	0.39	5.875	0.16	6.50	11.63	0.41	2.22	0.625	0.71	0.188
AM143/145	4.50	0.47	5.875	0.20	6.50	12.50	0.41	2.62	0.875	0.96	0.188
AM182/184	8.50	0.67	7.250	0.20	9.00	13.23	0.55	3.35	1.125	1.24	0.250

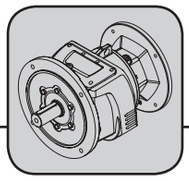

L..N47

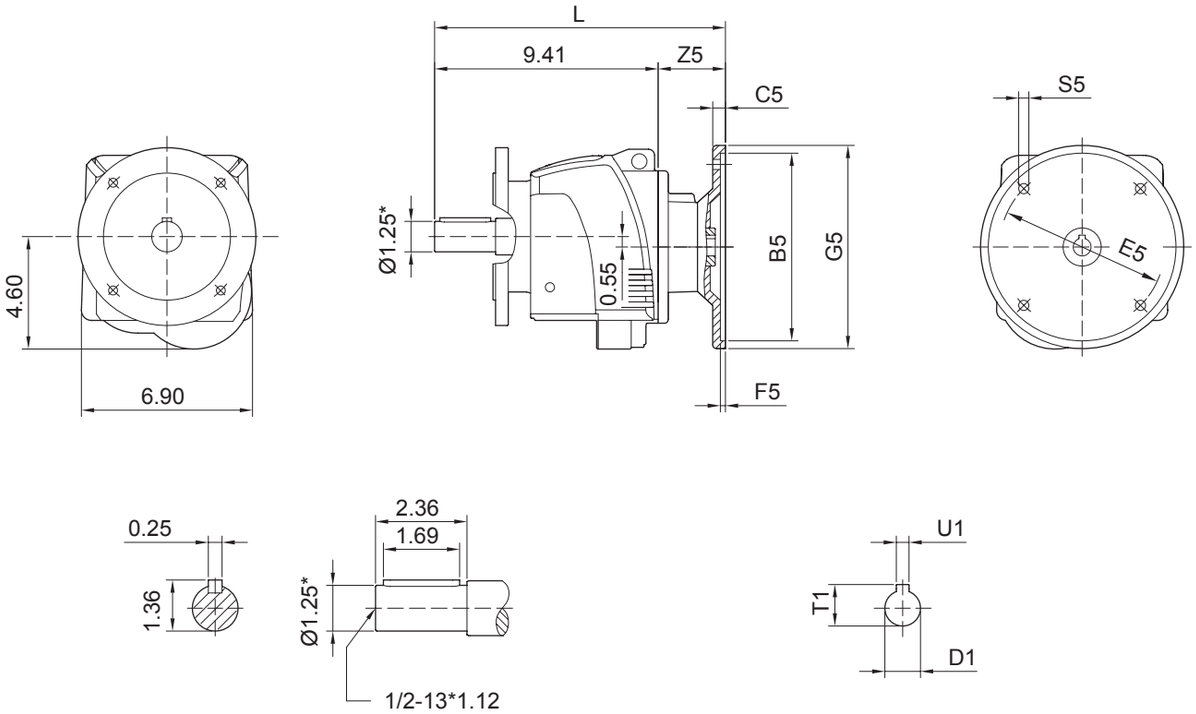

LVN47

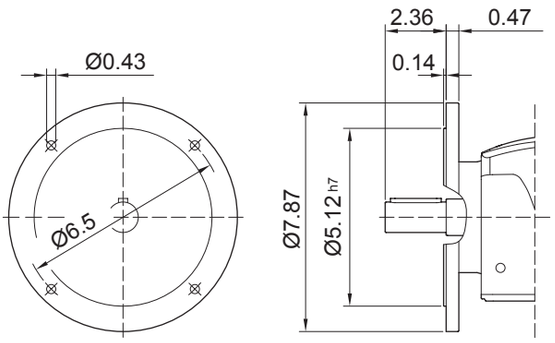

LWN47

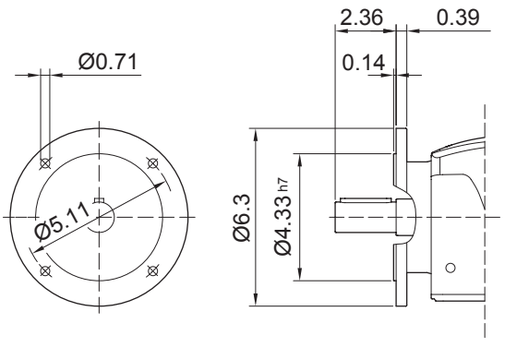

*Refer page17 for tolerance information.

For the dimension concerning the solid input shaft, please refer to the table shown at page 84.

Frame	B5	C5	E5	F5	G5	L	S5	Z5	D1	T1	U1
AM56	4.50	0.39	5.875	0.16	6.50	11.63	0.41	2.22	0.625	0.71	0.188
AM143/145	4.50	0.47	5.875	0.20	6.50	12.50	0.41	2.62	0.875	0.96	0.188
AM182/184	8.50	0.67	7.250	0.20	9.00	13.23	0.55	3.35	1.125	1.24	0.250

LHN57

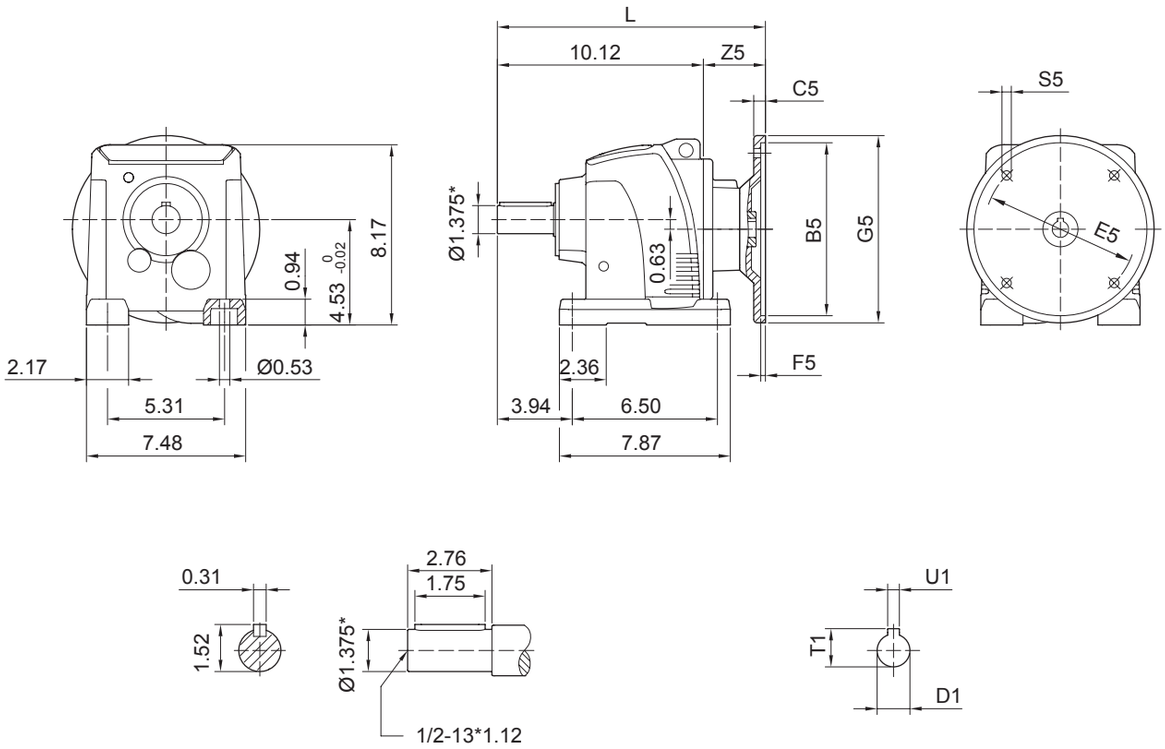

*Refer page17 for tolerance information.
For the dimension concerning the solid input shaft, please refer to the table shown at page84.

Frame	B5	C5	E5	F5	G5	L	S5	Z5	D1	T1	U1
AM56	4.50	0.39	5.875	0.16	6.50	12.34	0.41	2.22	0.625	0.71	0.188
AM143/145	4.50	0.47	5.875	0.20	6.50	12.74	0.41	2.62	0.875	0.96	0.188
AM182/184	8.50	0.67	7.250	0.20	9.00	13.46	0.55	3.35	1.125	1.24	0.250

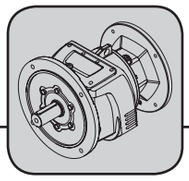

L..N57

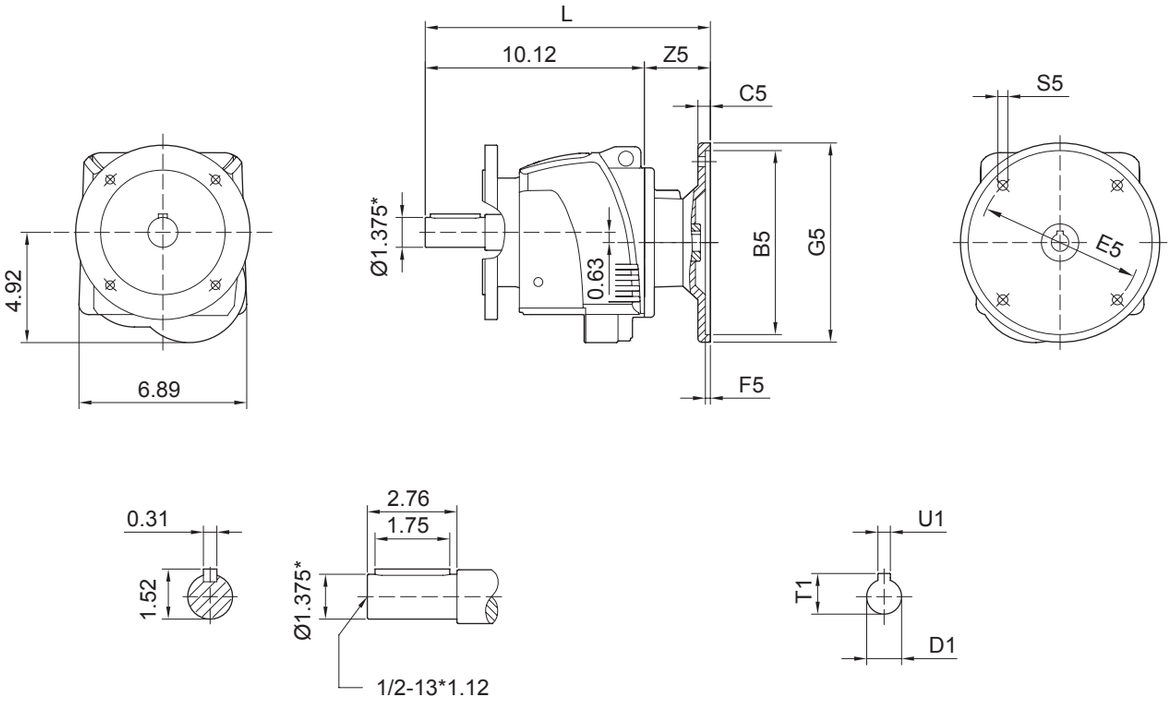

LVN57

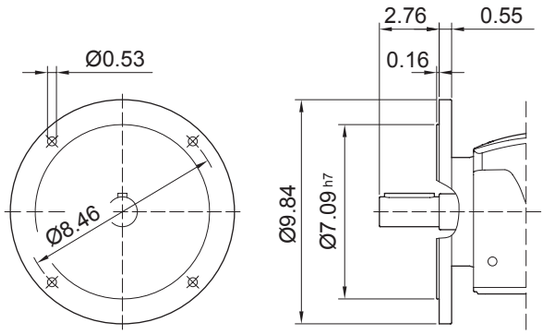

LWN57

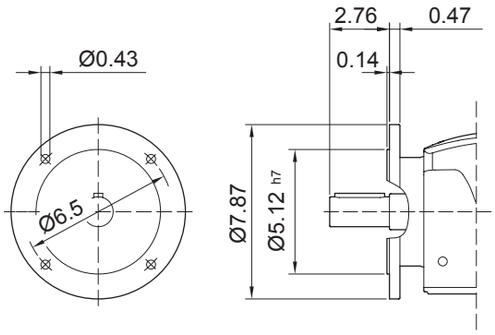

*Refer page17 for tolerance information.

For the dimension concerning the solid input shaft, please refer to the table shown at page 84.

Frame	B5	C5	E5	F5	G5	L	S5	Z5	D1	T1	U1
AM56	4.50	0.39	5.875	0.16	6.50	12.34	0.41	2.22	0.625	0.71	0.188
AM143/145	4.50	0.47	5.875	0.20	6.50	12.74	0.41	2.62	0.875	0.96	0.188
AM182/184	8.50	0.67	7.250	0.20	9.00	13.46	0.55	3.35	1.125	1.24	0.250

LHN67

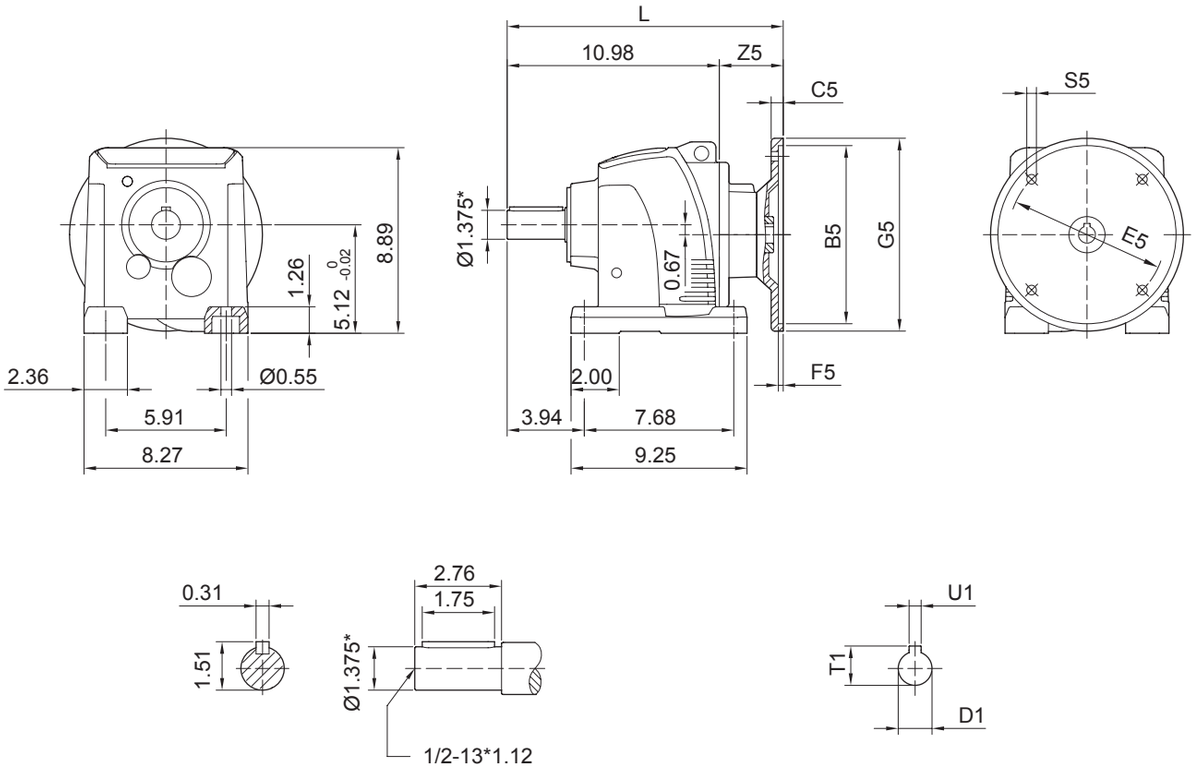

*Refer page17 for tolerance information.
For the dimension concerning the solid input shaft, please refer to the table shown at page84.

Frame	B5	C5	E5	F5	G5	L	S5	Z5	D1	T1	U1
AM143/145	4.50	0.39	5.875	0.16	6.50	13.13	0.41	2.15	0.625	0.71	0.188
AM182/184	8.50	0.47	5.875	0.20	9.00	13.52	0.41	2.54	0.875	0.96	0.188
AM213/215	8.50	0.67	7.250	0.20	9.00	14.25	0.55	3.27	1.125	1.24	0.250

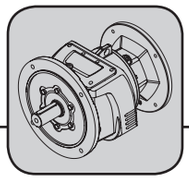

L..N67

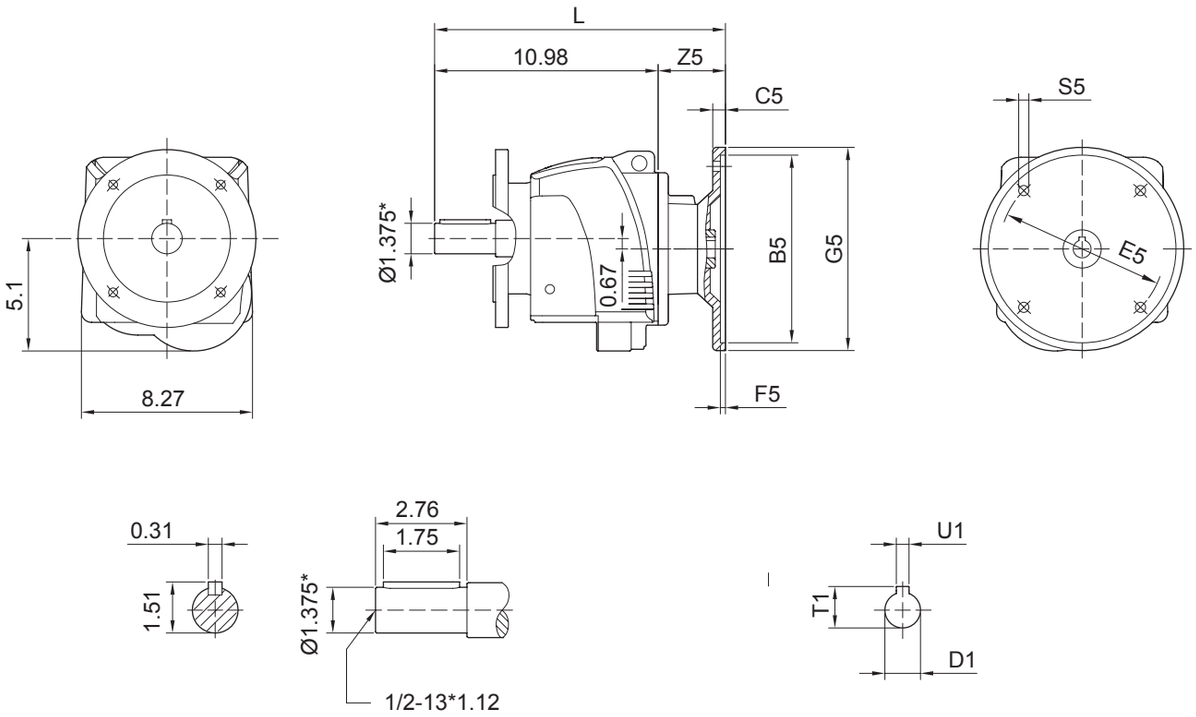

LVN67

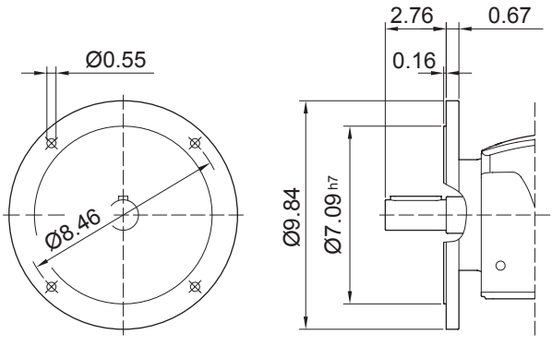

LWN67

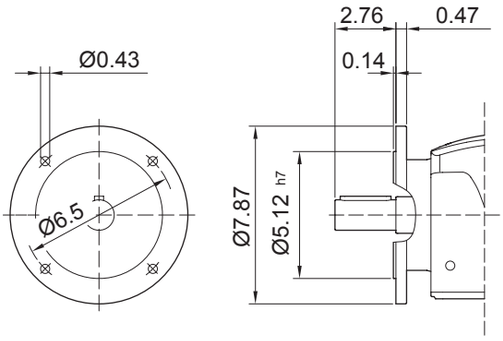

3

*Refer page17 for tolerance information.
For the dimension concerning the solid input shaft, please refer to the table shown at page84.

Frame	B5	C5	E5	F5	G5	L	S5	Z5	D1	T1	U1
AM143/145	4.50	0.39	5.875	0.16	6.50	13.13	0.41	2.15	0.625	0.71	0.188
AM182/184	8.50	0.47	5.875	0.20	9.00	13.52	0.41	2.54	0.875	0.96	0.188
AM213/215	8.50	0.67	7.250	0.20	9.00	14.25	0.55	3.27	1.125	1.24	0.250

LHN77

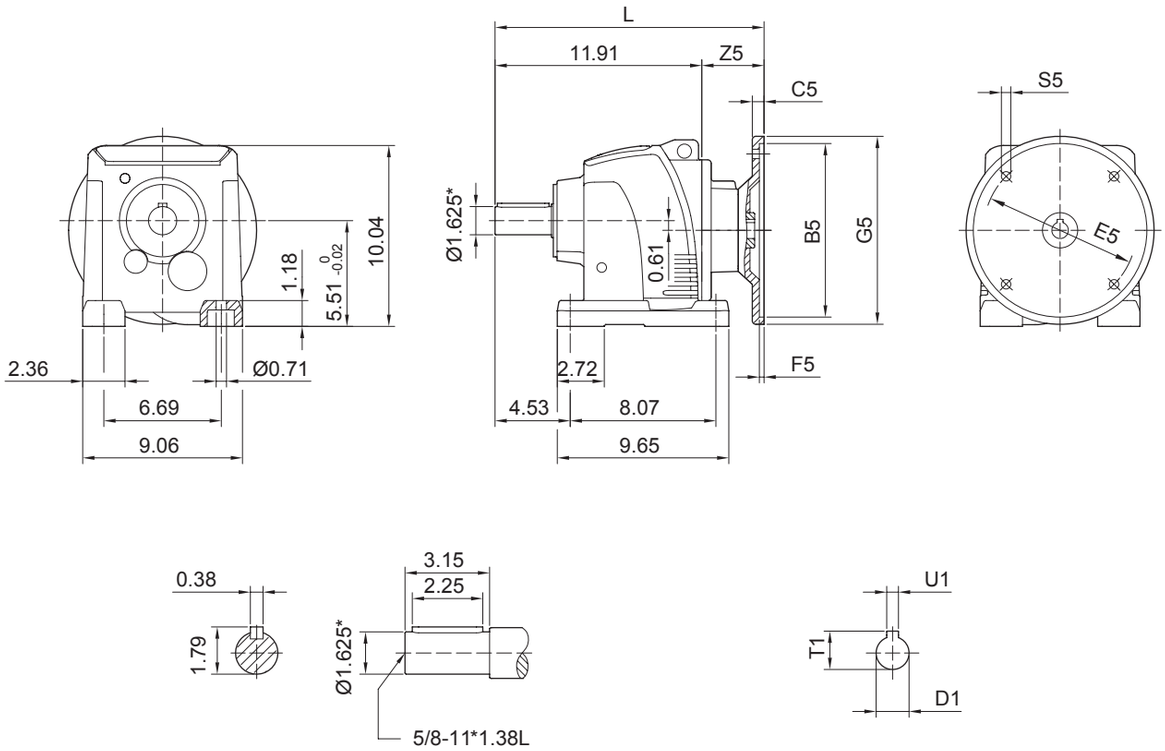

3

*Refer page17 for tolerance information.
For the dimension concerning the solid input shaft, please refer to the table shown at page84.

Frame	B5	C5	E5	F5	G5	L	S5	Z5	D1	T1	U1
AM56	4.50	0.39	5.875	0.16	6.50	14.23	0.41	2.32	0.625	0.71	0.188
AM143/145	4.50	0.47	5.875	0.20	6.50	14.23	0.41	2.32	0.875	0.96	0.188
AM182/184	8.50	0.67	7.250	0.20	9.00	14.96	0.55	3.05	1.125	1.24	0.250
AM213/215	8.50	0.79	7.250	0.20	9.00	17.22	0.55	5.31	1.375	1.52	0.312

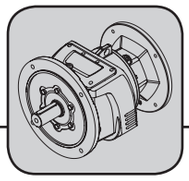

L..N77

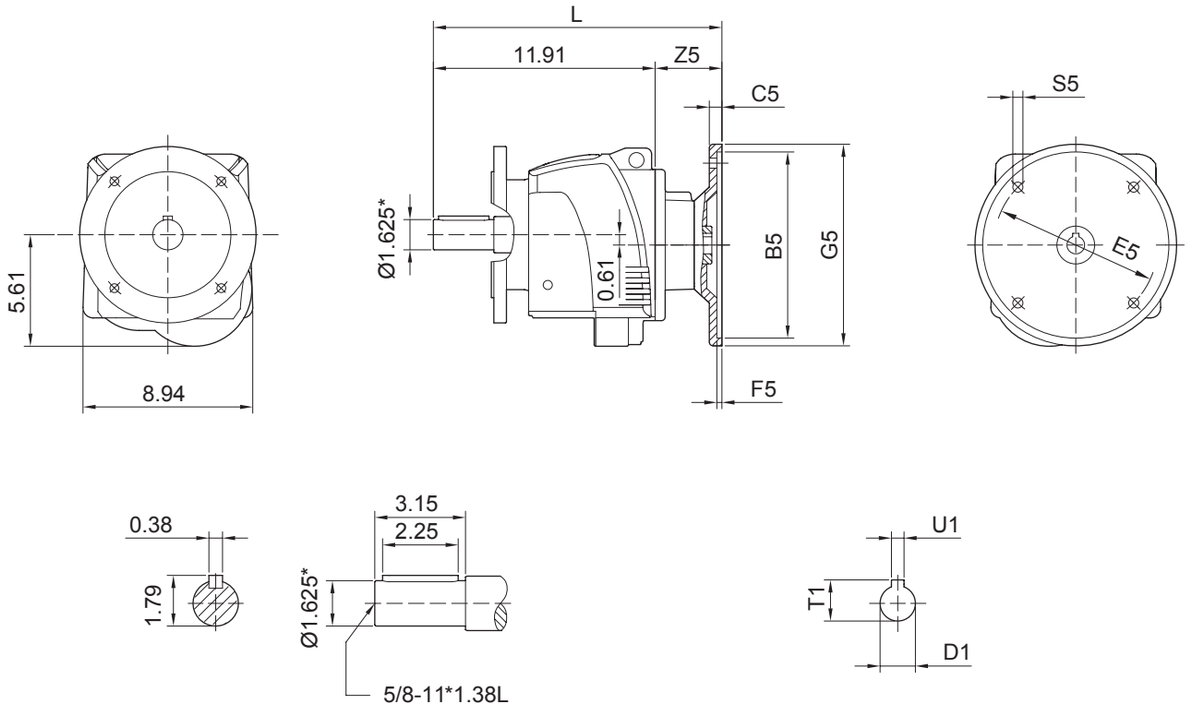

LVN77

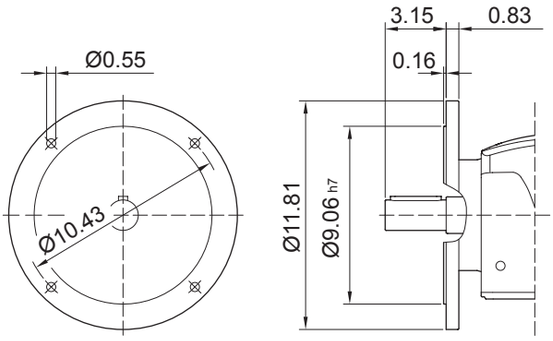

LWN77

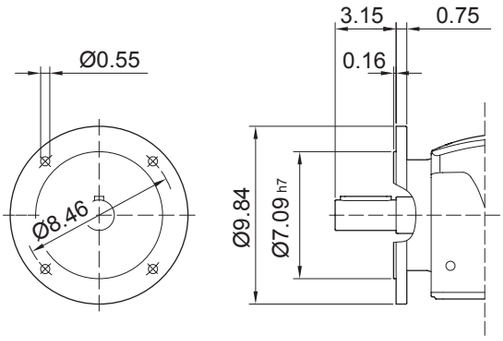

3

*Refer page17 for tolerance information.

For the dimension concerning the solid input shaft, please refer to the table shown at page84.

Frame	B5	C5	E5	F5	G5	L	S5	Z5	D1	T1	U1
AM56	4.50	0.39	5.875	0.16	6.50	14.23	0.41	2.32	0.625	0.71	0.188
AM143/145	4.50	0.47	5.875	0.20	6.50	14.23	0.41	2.32	0.875	0.96	0.188
AM182/184	8.50	0.67	7.250	0.20	9.00	14.96	0.55	3.05	1.125	1.24	0.250
AM213/215	8.50	0.79	7.250	0.20	9.00	17.22	0.55	5.31	1.375	1.52	0.312

LHN87

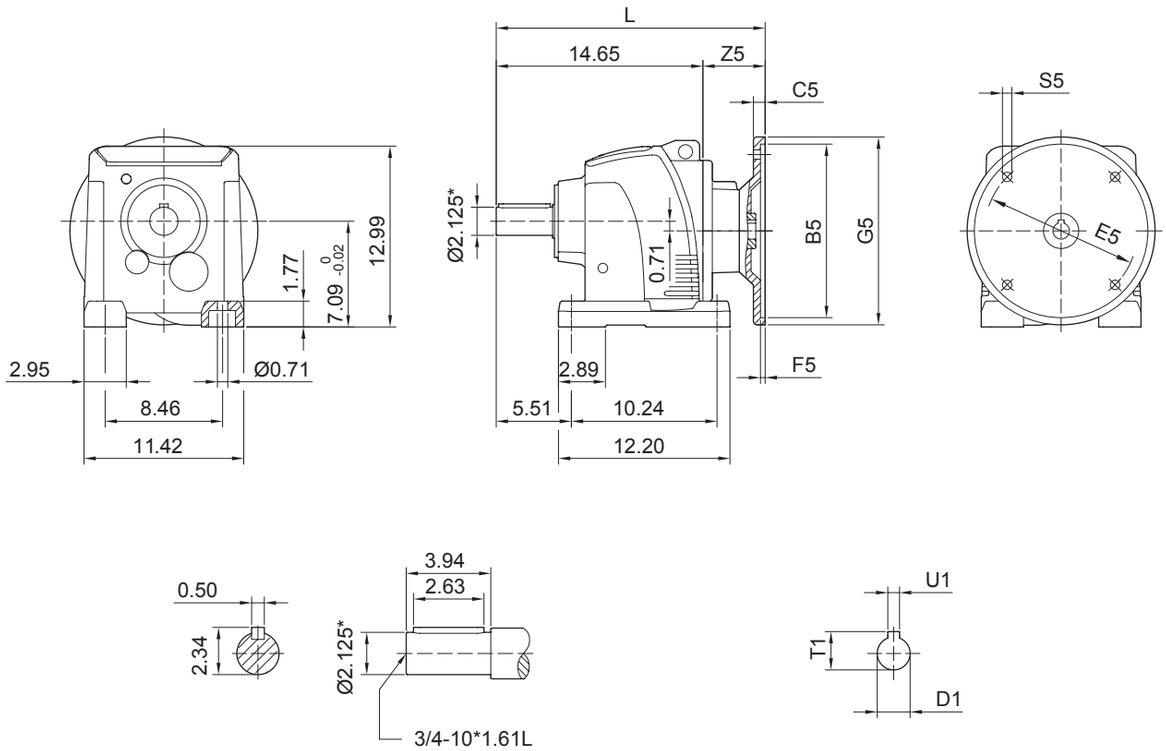

3

*Refer page17 for tolerance information.
For the dimension concerning the solid input shaft, please refer to the table shown at page84.

Frame	B5	C5	E5	F5	G5	L	S5	Z5	D1	T1	U1
AM56	4.50	0.39	5.875	0.16	6.50	17.20	0.41	2.56	0.625	0.71	0.188
AM143/145	4.50	0.47	5.875	0.20	6.50	17.20	0.41	2.56	0.875	0.96	0.188
AM182/184	8.50	0.67	7.250	0.20	9.00	17.32	0.55	2.68	1.125	1.24	0.250
AM213/215	8.50	0.67	7.250	0.20	9.00	19.59	0.55	4.94	1.375	1.52	0.312
AM254/256	8.50	0.79	7.250	0.20	10.00	20.57	0.55	5.93	1.625	1.80	0.375

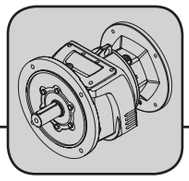

L..N87

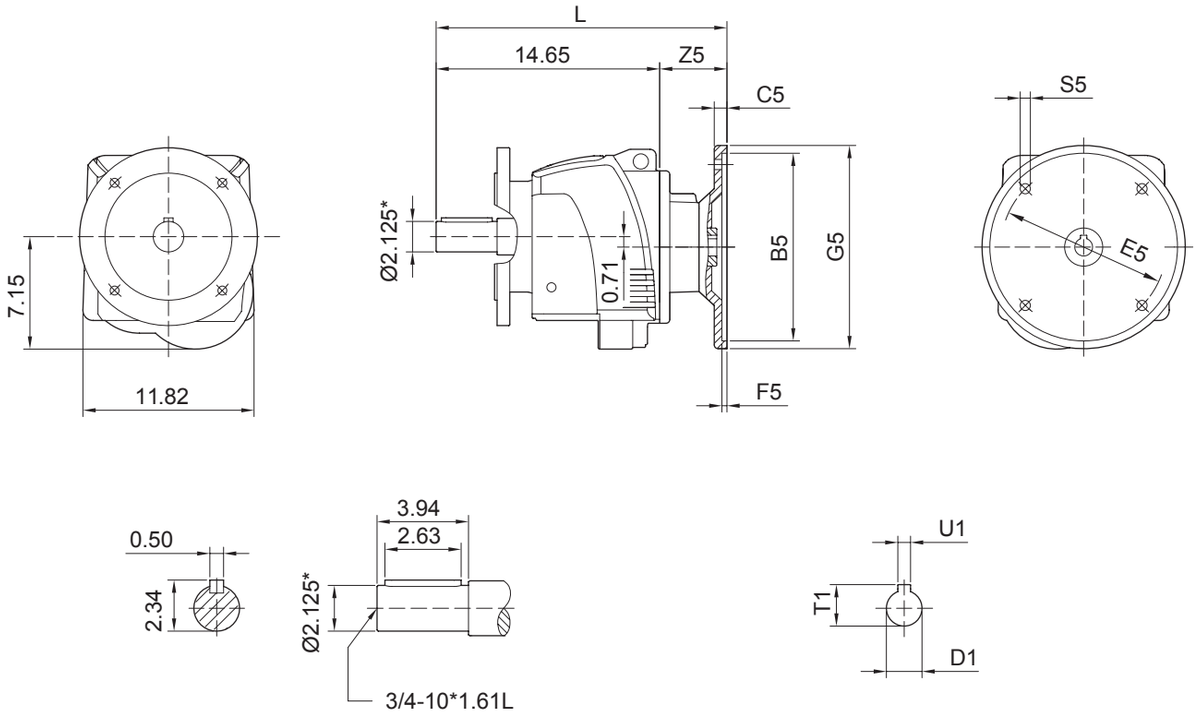

LVN87

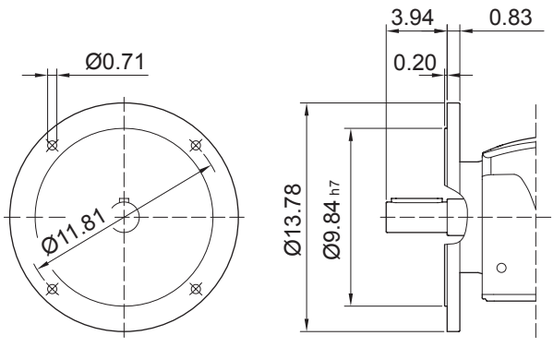

LWN87

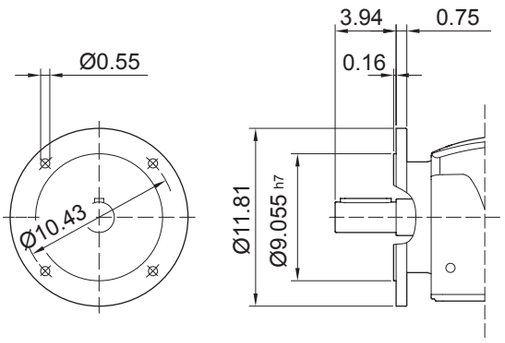

*Refer page17 for tolerance information.
For the dimension concerning the solid input shaft, please refer to the table shown at page84.

Frame	B5	C5	E5	F5	G5	L	S5	Z5	D1	T1	U1
AM56	4.50	0.39	5.875	0.16	6.50	17.20	0.41	2.56	0.625	0.71	0.188
AM143/145	4.50	0.47	5.875	0.20	6.50	17.20	0.41	2.56	0.875	0.96	0.188
AM182/184	8.50	0.67	7.250	0.20	9.00	17.32	0.55	2.68	1.125	1.24	0.250
AM213/215	8.50	0.67	7.250	0.20	9.00	19.59	0.55	4.94	1.375	1.52	0.312
AM254/256	8.50	0.79	7.250	0.20	10.00	20.57	0.55	5.93	1.625	1.80	0.375

LHN97

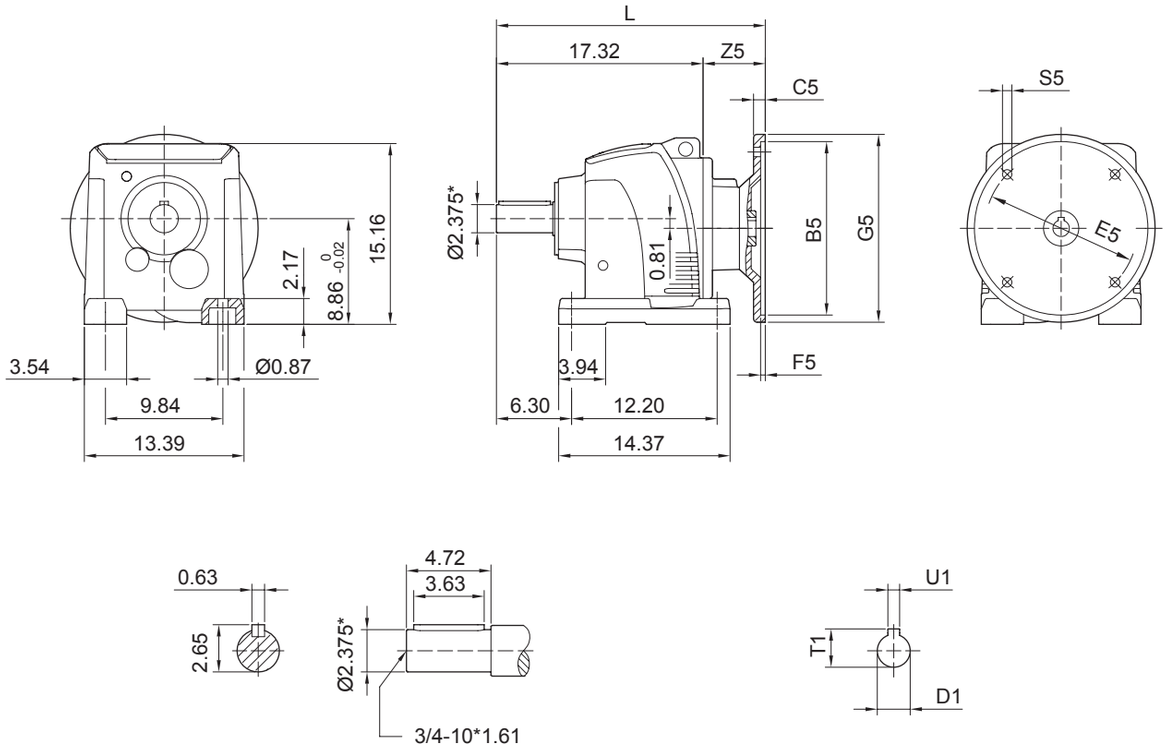

*Refer page17 for tolerance information.

For the dimension concerning the solid input shaft, please refer to the table shown at page84.

Frame	B5	C5	E5	F5	G5	L	S5	Z5	D1	T1	U1
AM182/184	8.50	0.67	7.250	0.20	9.00	19.72	0.55	2.52	1.125	1.24	0.250
AM213/215	8.50	0.67	7.250	0.20	9.00	21.83	0.55	4.63	1.375	1.52	0.312
AM254/256	8.50	0.79	7.250	0.20	10.00	22.81	0.55	5.61	1.625	1.80	0.375
AM284/286	10.50	0.79	9.000	0.20	11.26	23.17	0.59	5.96	1.875	2.10	0.500

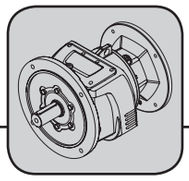

L..N97

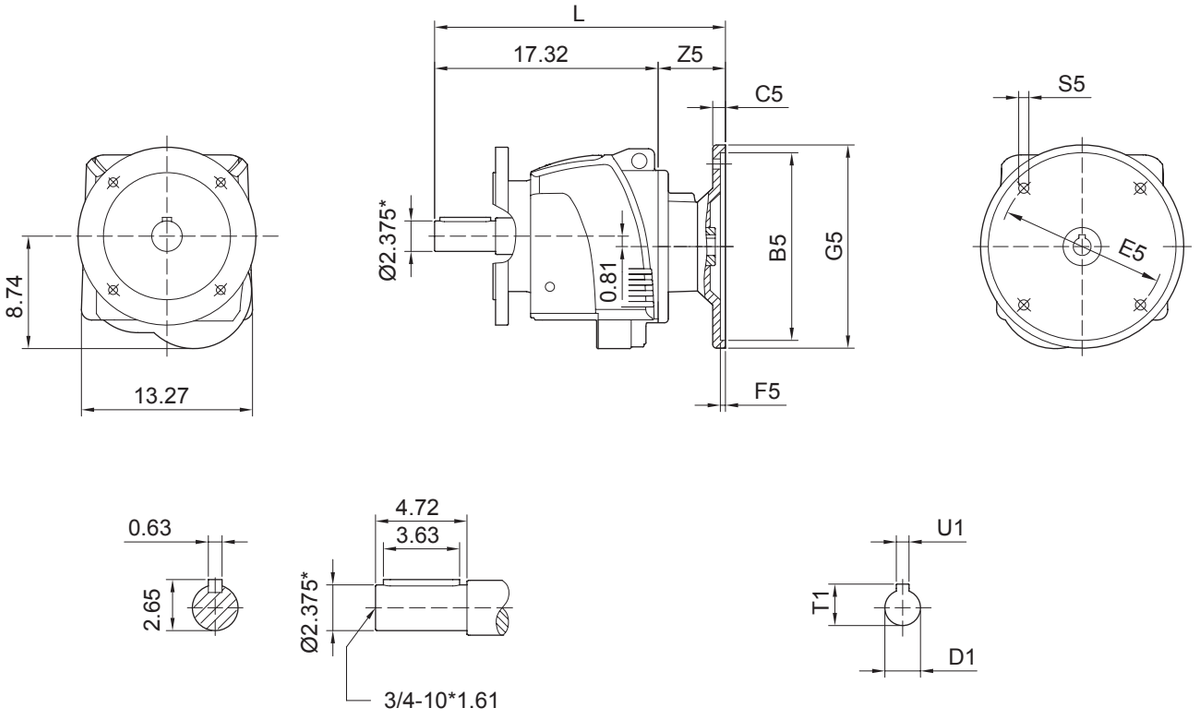

LVN97

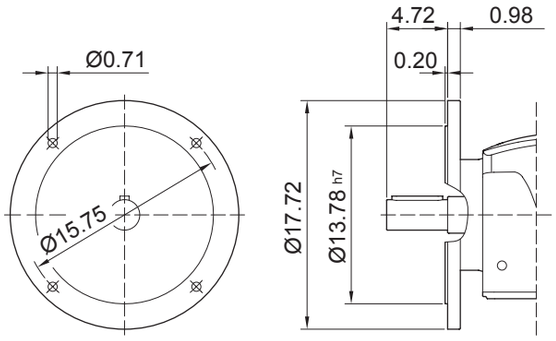

LWN97

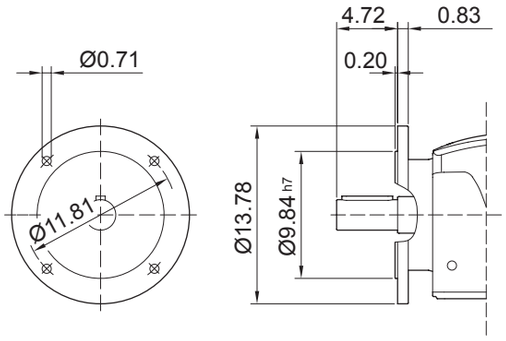

*Refer page17 for tolerance information.

For the dimension concerning the solid input shaft, please refer to the table shown at page84.

Frame	B5	C5	E5	F5	G5	L	S5	Z5	D1	T1	U1
AM182/184	8.50	0.67	7.250	0.20	9.00	19.72	0.55	2.52	1.125	1.24	0.250
AM213/215	8.50	0.67	7.250	0.20	9.00	21.83	0.55	4.63	1.375	1.52	0.312
AM254/256	8.50	0.79	7.250	0.20	10.00	22.81	0.55	5.61	1.625	1.80	0.375
AM284/286	10.50	0.79	9.000	0.20	11.26	23.17	0.59	5.96	1.875	2.10	0.500

MHN107

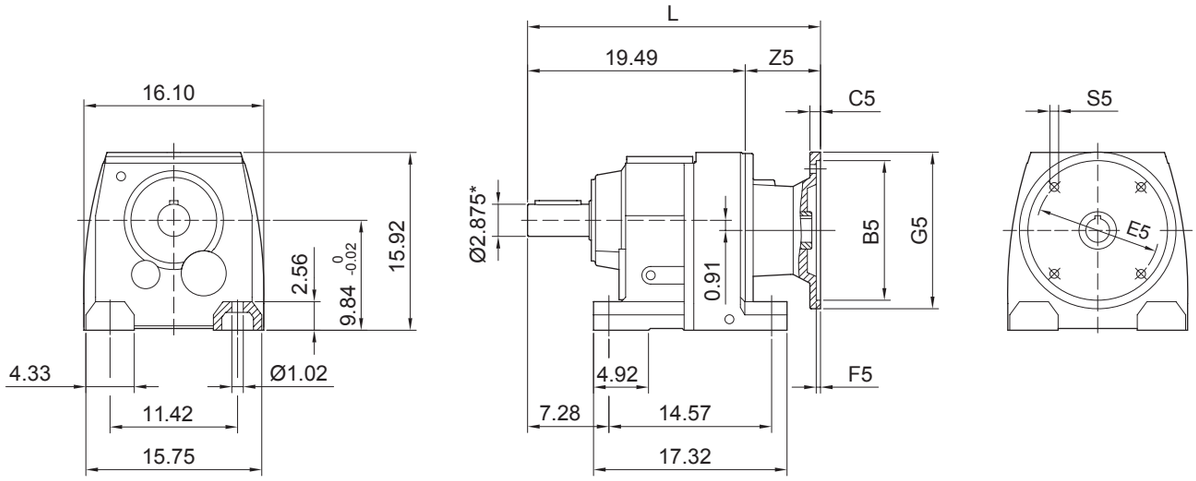

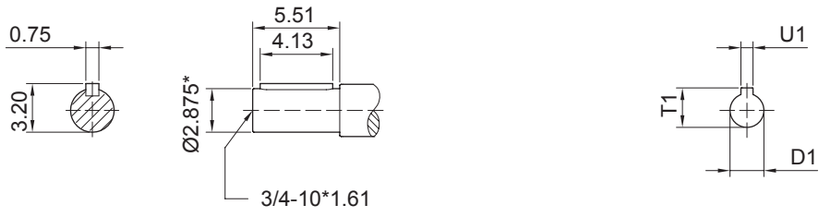

3

*Refer page17 for tolerance information.
For the dimension concerning the solid input shaft, please refer to the table shown at page86.

Frame	B5	C5	E5	F5	G5	L	S5	Z5	D1	T1	U1
AM213/215	8.50	0.67	7.250	0.20	9.00	23.74	0.55	4.25	1.375	1.52	0.312
AM254/256	8.50	0.79	7.250	0.20	10.00	24.72	0.55	5.24	1.625	1.80	0.375
AM284/286	10.50	0.79	9.000	0.20	11.26	25.08	0.59	5.59	1.875	2.10	0.500
AM324/326	12.50	0.79	11.000	0.20	14.02	26.30	0.65	6.81	2.125	2.35	0.500

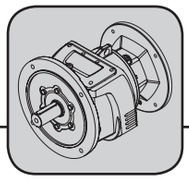

M..N107

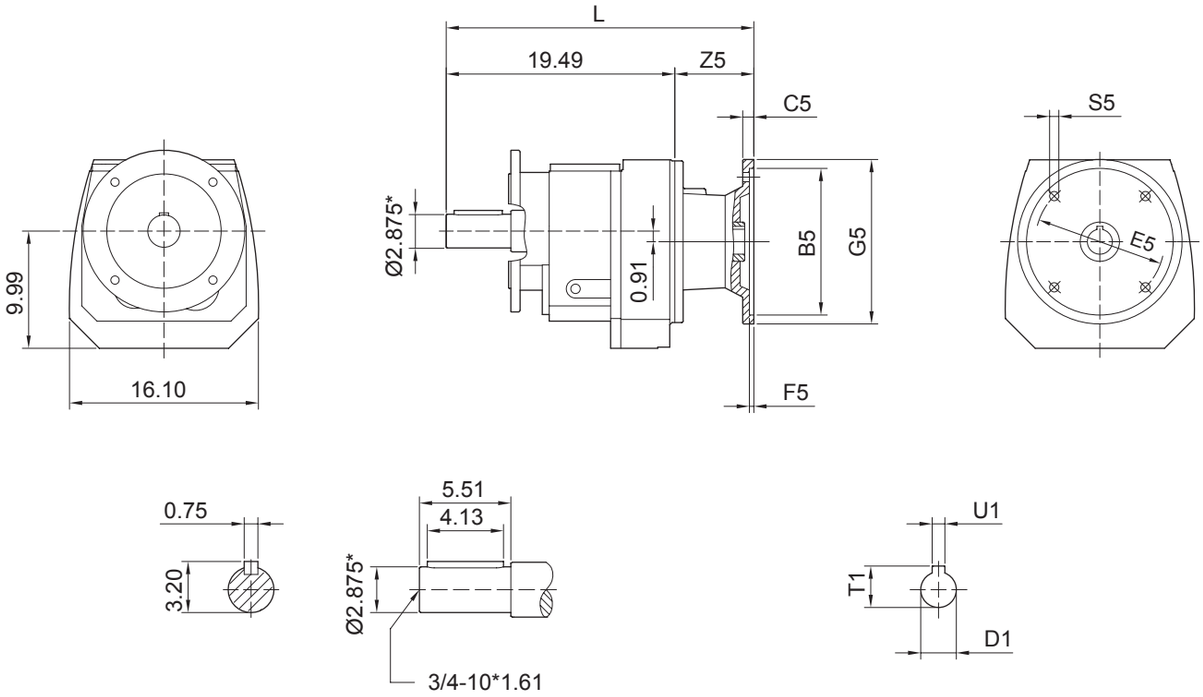

MVN107

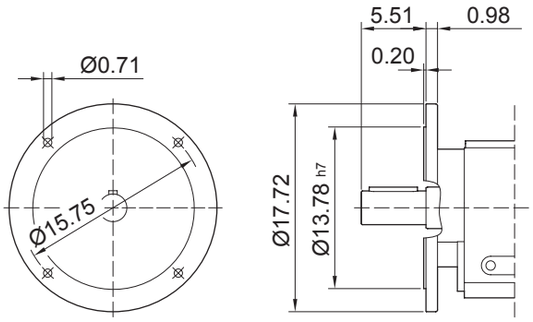

MWN107

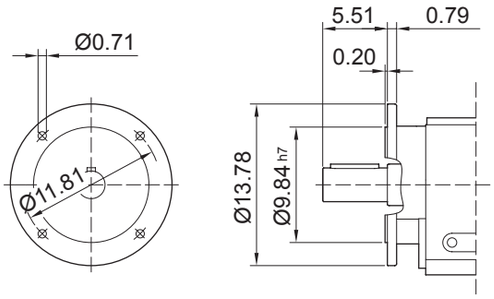

3

*Refer page17 for tolerance information.

For the dimension concerning the solid input shaft, please refer to the table shown at page86.

Frame	B5	C5	E5	F5	G5	L	S5	Z5	D1	T1	U1
AM213/215	8.50	0.67	7.250	0.20	9.00	23.74	0.55	4.25	1.375	1.52	0.312
AM254/256	8.50	0.79	7.250	0.20	10.00	24.72	0.55	5.24	1.625	1.80	0.375
AM284/286	10.50	0.79	9.000	0.20	11.26	25.08	0.59	5.59	1.875	2.10	0.500
AM324/326	12.50	0.79	11.000	0.20	14.02	26.30	0.65	6.81	2.125	2.35	0.500

MHN137

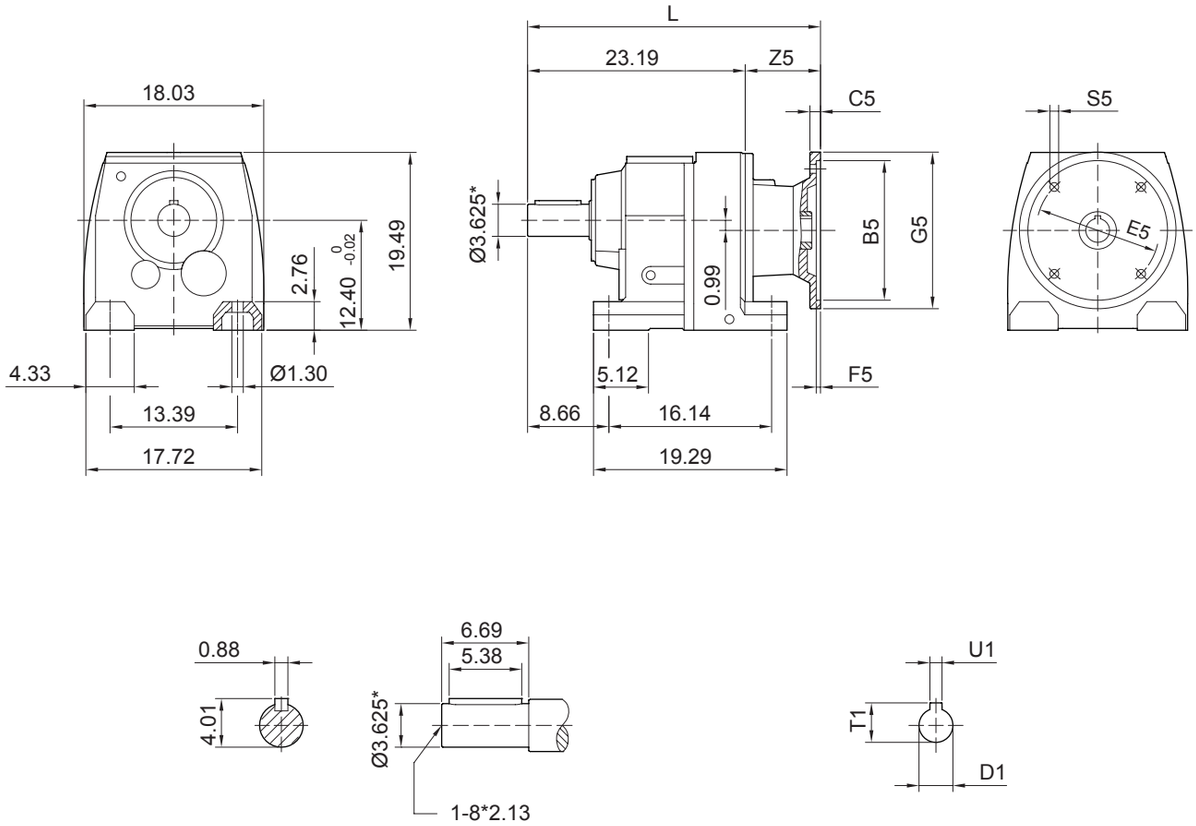

3

*Refer page17 for tolerance information.
For the dimension concerning the solid input shaft, please refer to the table shown at page86.

Frame	B5	C5	E5	F5	G5	L	S5	Z5	D1	T1	U1
AM254/256	8.50	0.79	7.250	0.20	10.00	28.07	0.55	4.84	1.625	1.80	0.375
AM284/286	10.50	0.79	9.000	0.20	11.26	28.39	0.59	5.16	1.875	2.10	0.500
AM324/326	12.50	0.79	11.000	0.20	14.02	29.61	0.65	6.38	2.125	2.35	0.500
AM364/365	12.50	0.87	11.000	0.20	14.02	30.67	0.65	7.44	2.375	2.65	0.625

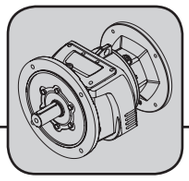

M..N137

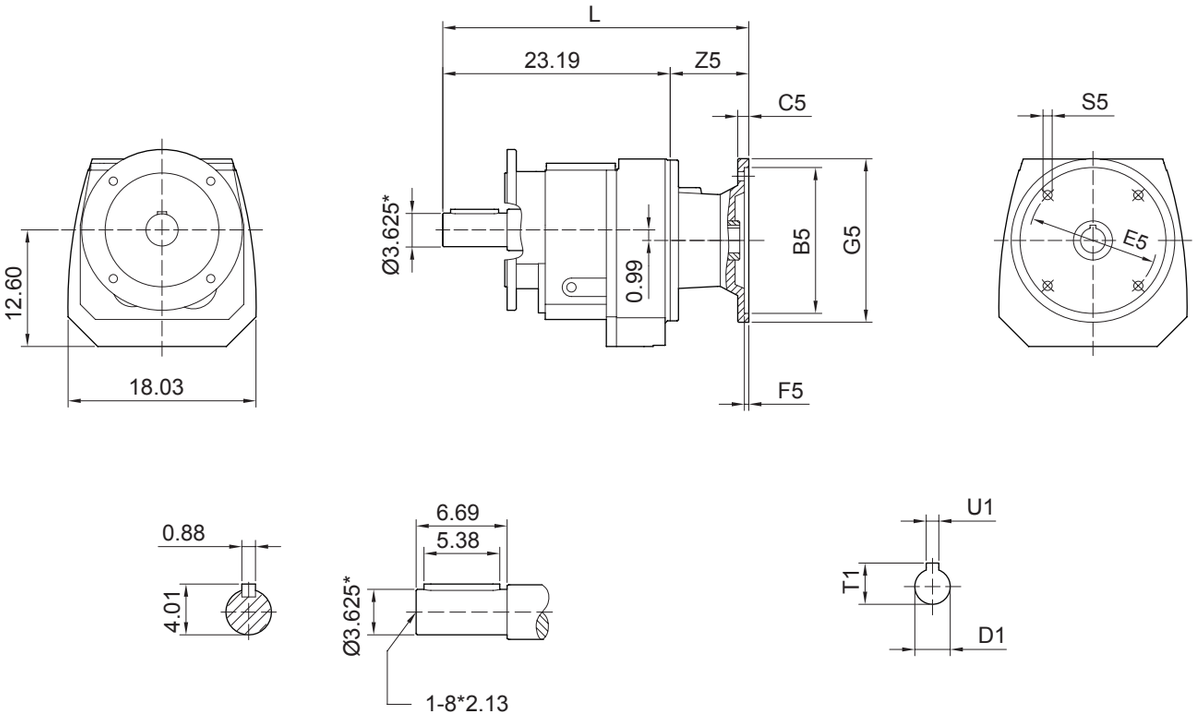

MVN137

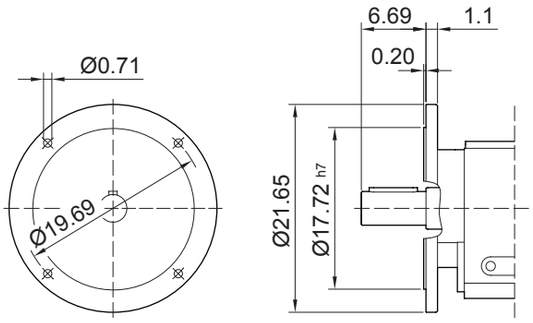

MWN137

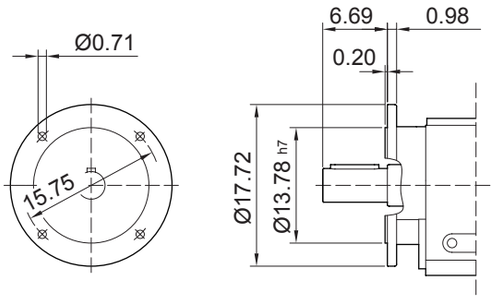

*Refer page17 for tolerance information.

For the dimension concerning the solid input shaft, please refer to the table shown at page86.

Frame	B5	C5	E5	F5	G5	L	S5	Z5	D1	T1	U1
AM254/256	8.50	0.79	7.250	0.20	10.00	28.07	0.55	4.84	1.625	1.80	0.375
AM284/286	10.50	0.79	9.000	0.20	11.26	28.39	0.59	5.16	1.875	2.10	0.500
AM324/326	12.50	0.79	11.000	0.20	14.02	29.61	0.65	6.38	2.125	2.35	0.500
AM364/365	12.50	0.87	11.000	0.20	14.02	30.67	0.65	7.44	2.375	2.65	0.625

MHN147

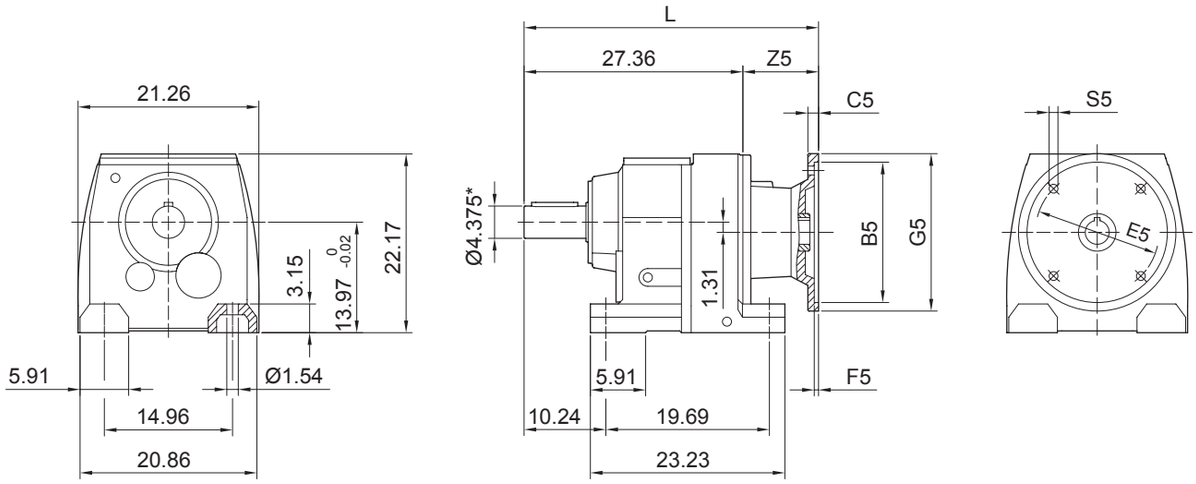

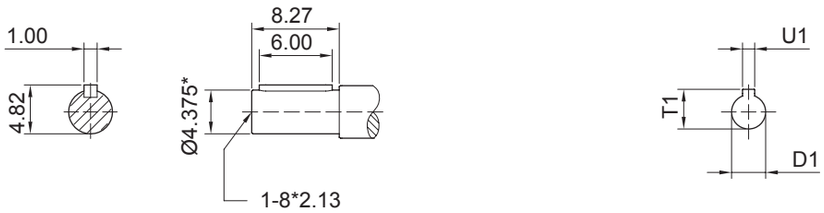

3

*Refer page17 for tolerance information.
For the dimension concerning the solid input shaft, please refer to the table shown at page86.

Frame	B5	C5	E5	F5	G5	L	S5	Z5	D1	T1	U1
AM254/256	8.50	0.79	7.250	0.20	10.00	31.89	0.55	4.53	1.625	1.80	0.375
AM284/286	10.50	0.79	9.000	0.20	11.26	32.21	0.59	4.84	1.875	2.10	0.500
AM324/326	12.50	0.79	11.000	0.20	14.02	33.58	0.65	6.22	2.125	2.35	0.500
AM364/365	12.50	0.87	11.000	0.20	14.02	34.65	0.65	7.28	2.375	2.65	0.625
AM404/405	12.50	0.87	11.000	0.20	13.88	36.61	0.73	9.25	2.875	3.21	0.750

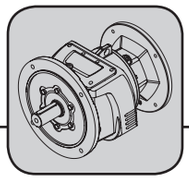

M..N147

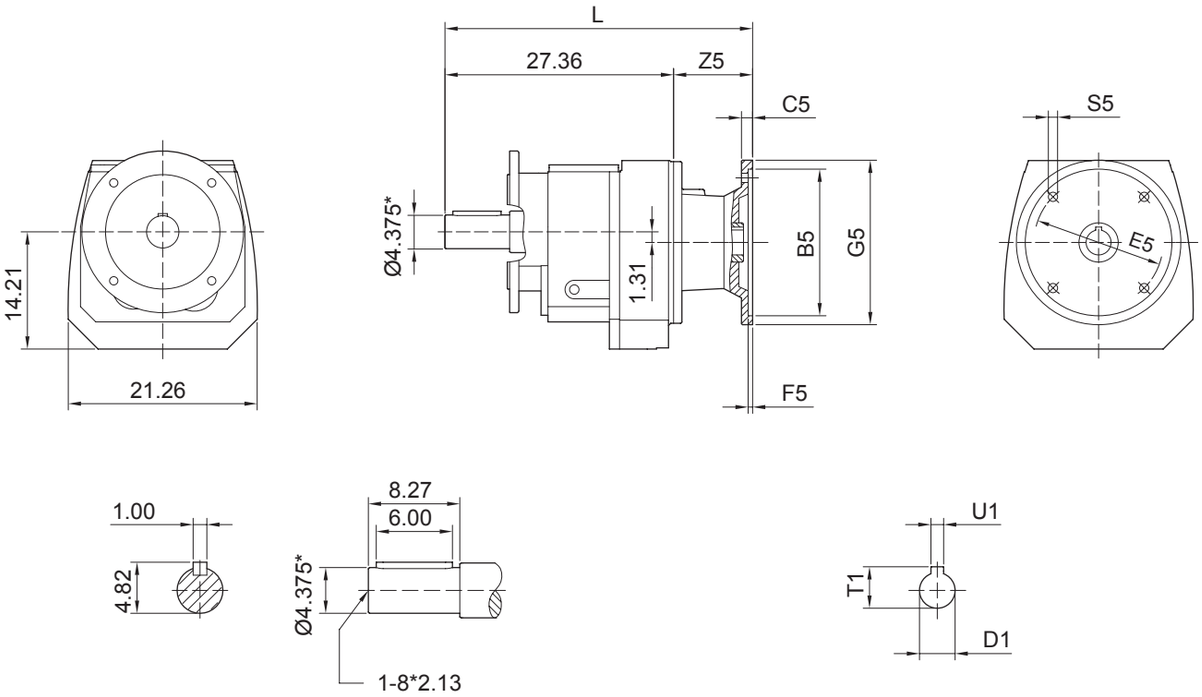

MVN147

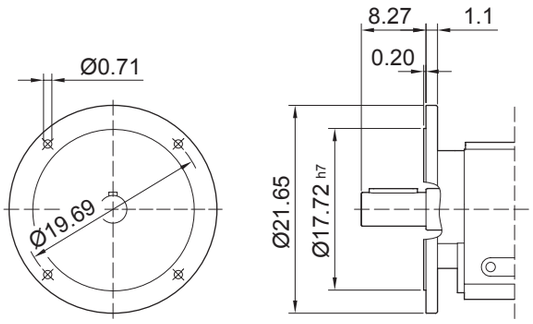

MWN147

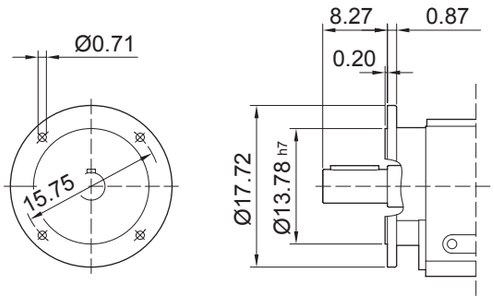

3

*Refer page17 for tolerance information.
For the dimension concerning the solid input shaft, please refer to the table shown at page86.

Frame	B5	C5	E5	F5	G5	L	S5	Z5	D1	T1	U1
AM254/256	8.50	0.79	7.250	0.20	10.00	31.89	0.55	4.53	1.625	1.80	0.375
AM284/286	10.50	0.79	9.000	0.20	11.26	32.21	0.59	4.84	1.875	2.10	0.500
AM324/326	12.50	0.79	11.000	0.20	14.02	33.58	0.65	6.22	2.125	2.35	0.500
AM364/365	12.50	0.87	11.000	0.20	14.02	34.65	0.65	7.28	2.375	2.65	0.625
AM404/405	12.50	0.87	11.000	0.20	13.88	36.61	0.73	9.25	2.875	3.21	0.750

MHN167

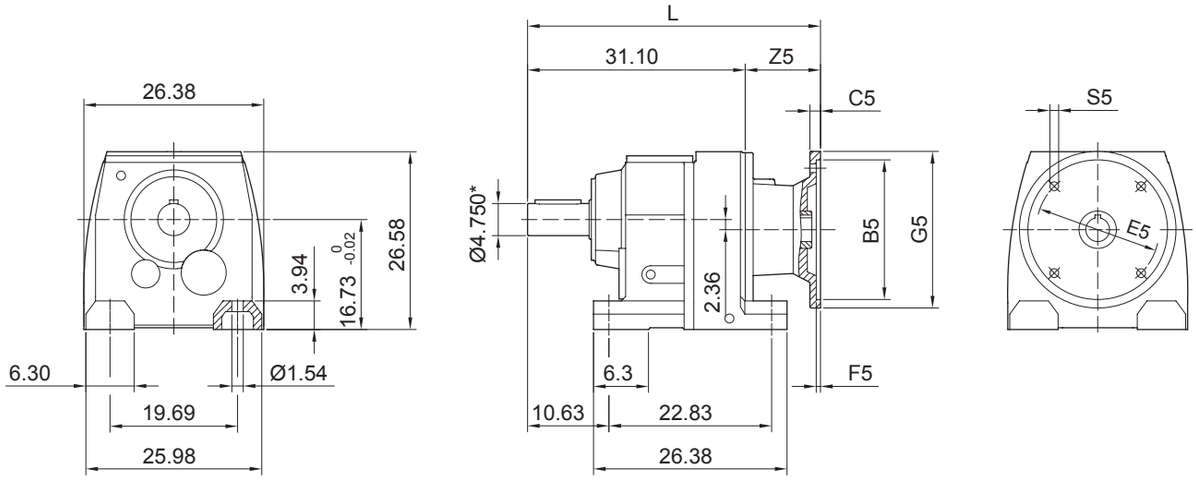

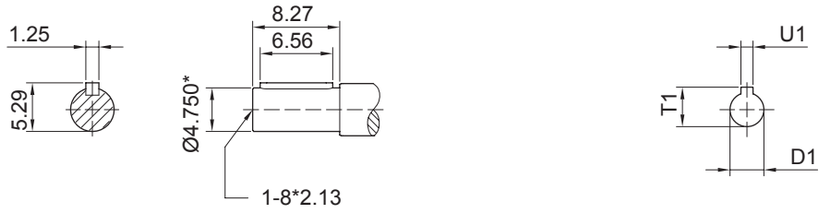

3

*Refer page17 for tolerance information.
For the dimension concerning the solid input shaft, please refer to the table shown at page86.

Frame	B5	C5	E5	F5	G5	L	S5	Z5	D1	T1	U1
AM254/256	8.50	0.79	7.250	0.20	10.00	35.59	0.55	4.49	1.625	1.80	0.375
AM284/286	10.50	0.79	9.000	0.20	11.26	35.94	0.59	4.84	1.875	2.10	0.500
AM324/326	12.50	0.79	11.000	0.20	14.02	36.97	0.65	5.87	2.125	2.35	0.500
AM364/365	12.50	0.87	11.000	0.20	14.02	38.03	0.65	6.93	2.375	2.65	0.625
AM404/405	12.50	0.87	11.000	0.20	13.88	40.10	0.65	9.00	2.875	3.21	0.750
AM444/445	16.00	0.87	14.000	0.20	16.75	41.36	0.67	10.26	3.375	3.59	0.875

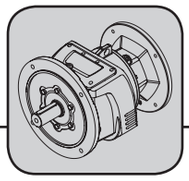

M..N167

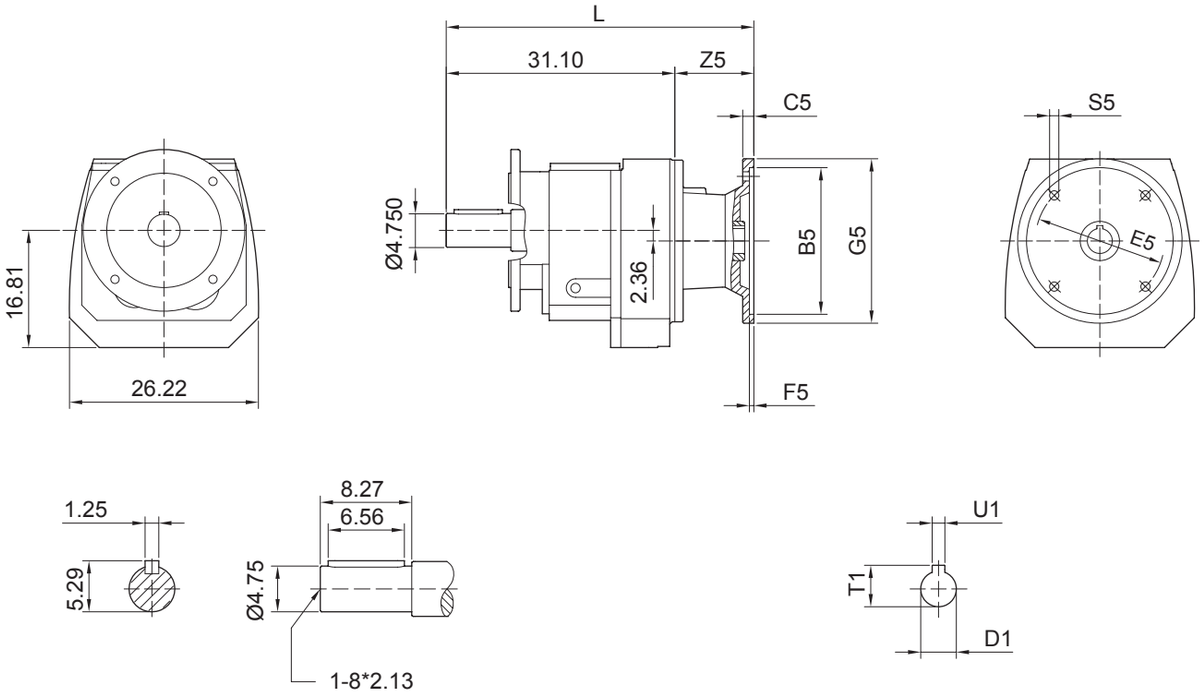

MVN167

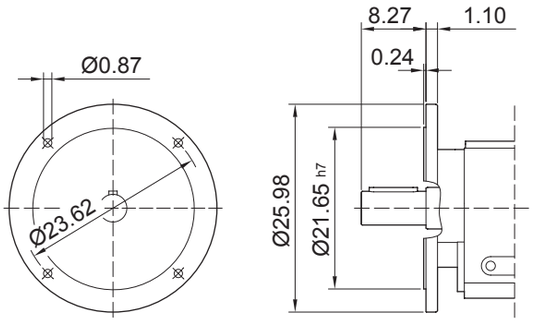

MWN167

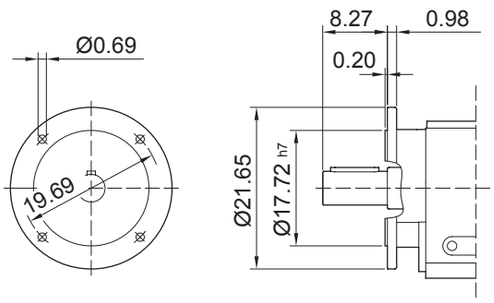

*Refer page17 for tolerance information.

For the dimension concerning the solid input shaft, please refer to the table shown at page86.

Frame	B5	C5	E5	F5	G5	L	S5	Z5	D1	T1	U1
AM254/256	8.50	0.79	7.250	0.20	10.00	35.59	0.55	4.49	1.625	1.80	0.375
AM284/286	10.50	0.79	9.000	0.20	11.26	35.94	0.59	4.84	1.875	2.10	0.500
AM324/326	12.50	0.79	11.000	0.20	14.02	36.97	0.65	5.87	2.125	2.35	0.500
AM364/365	12.50	0.87	11.000	0.20	14.02	38.03	0.65	6.93	2.375	2.65	0.625
AM404/405	12.50	0.87	11.000	0.20	13.88	40.10	0.65	9.00	2.875	3.21	0.750
AM444/445	16.00	0.87	14.000	0.20	16.75	41.36	0.67	10.26	3.375	3.59	0.875

Solid Input Shaft

L..D

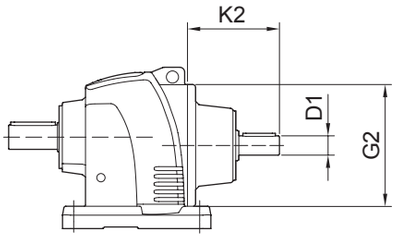

FIG 1

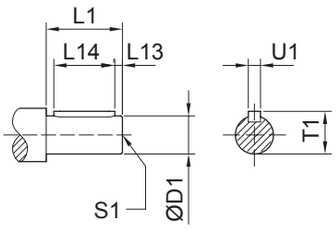

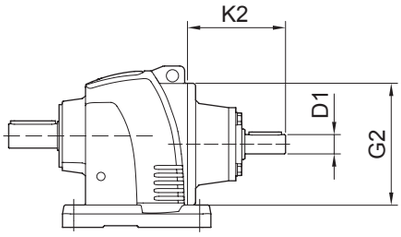

FIG 2

Size	D1	L1	L13	L14	T1	U1	S1	K2	G2	FIG
L..37	0.625	1.57	0.25	1.26	0.7	0.1875	1/4-20*0.63	3.46	4.74	1
	0.750				0.83			3.56		
L..47	0.750	1.57	0.25	1.26	0.83	0.1875	1/4-20*0.63	3.39	6.30	1
	0.875	1.97	0.29	1.57	0.96	0.1875	5/16-18*0.87	3.78	6.30	1
L..57	0.750	1.57	0.25	1.26	0.83	0.1875	1/4-20*0.63	4.39	6.30	2
	0.875	1.97	0.29	1.57	0.96	0.1875	5/16-18*0.87	4.70	6.30	2
L..67	0.750	1.57	0.25	1.26	0.83	0.1875	1/4-20*0.63	4.39	6.30	2
	0.875	1.97	0.29	1.57	0.96	0.1875	5/16-18*0.87	4.70	6.30	2
L..77	0.750	1.57	0.25	1.26	0.83	0.1875	1/4-20*0.63	4.17	7.87	2
	0.875	1.97	0.29	1.57	0.96	0.1875	5/16-18*0.87	4.49	7.87	2
	1.375	3.14	0.35	2.76	1.51	0.3125	1/2-13*1.12	6.97	7.87	2
L..87	0.750	1.57	0.25	1.26	0.83	0.1875	1/4-20*0.63	3.80	9.84	2
	1.125	2.36	0.32	1.97	1.24	0.2500	3/8-16*0.87	4.50	9.84	2
	1.375	3.14	0.35	2.76	1.51	0.3125	1/2-13*1.12	6.59	9.84	2
	1.625	4.33	0.58	2.76	1.79	0.3750	5/8-11*1.38	9.47	9.84	2
L..97	1.125	2.36	0.32	1.97	1.24	0.2500	3/8-16*0.87	4.35	11.81	2
	1.375	3.14	0.35	2.76	1.51	0.3125	1/2-13*1.12	6.28	11.81	2
	1.625	4.33	0.58	2.76	1.79	0.3750	5/8-11*1.38	9.15	11.81	2
	1.875	4.33	0.64	3.15	2.09	0.5000	5/8-11*1.38	9.35	11.81	2

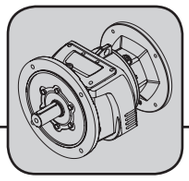

R37	
Ratio *i*	Input Dia
138.36	0.625
119.28	
100.51	
91.53	
79.77	
76.66	
69.81	
60.84	
54.03	
52.24	
44.01	
40.08	0.750
34.93	
31.02	
25.89	
24.50	
22.09	
19.95	
17.89	
15.75	
13.07	
11.73	
10.02	
8.50	
6.74	
5.75	
4.88	
4.00	

R47	
Ratio *i*	Input Dia
178.83	0.750
160.40	
138.19	
126.22	
110.34	
99.46	
89.82	
80.58	
77.84	
70.91	
63.37	
58.84	
52.84	
45.13	
41.51	
37.28	
31.83	
27.19	
25.01	
22.46	
24.70	
23.02	
20.49	
18.37	
15.18	
11.27	
8.06	0.875
6.79	
4.85	
3.99	

R57	
Ratio *i*	Input Dia
182.99	0.750
164.13	
141.40	
129.16	
112.90	
101.77	
91.91	
82.45	
79.65	
72.56	
64.84	
60.21	
54.07	
46.18	
42.48	
38.14	
32.33	
27.61	
25.40	
22.81	
25.27	
23.55	
20.96	
18.80	
15.53	
11.53	
8.24	0.875
6.89	
4.93	
4.06	

R67	
Ratio *i*	Input Dia
199.88	0.750
169.10	
151.03	
140.75	
125.28	
112.34	
98.69	
92.80	
78.59	
68.90	
63.07	
58.23	
52.21	
45.87	
41.22	
38.75	
32.02	
28.77	
22.90	0.875
24.14	0.750
21.33	
18.79	
15.41	
12.53	0.875
9.90	
6.06	
5.23	
4.14	

R77	
Ratio *i*	Input Dia
194.80	0.750
170.05	
153.87	
140.70	
124.34	
109.54	
89.80	
84.62	
73.05	
57.73	
53.24	
46.90	
39.31	
36.23	
31.97	0.875
25.27	
23.31	0.750
18.08	
14.83	0.875
13.21	1.375
11.85	
10.91	
9.21	
5.78	
4.78	
4.03	

R87	
Ratio *i*	Input Dia
201.38	0.750
179.70	
161.11	
137.42	
122.17	
112.52	
87.27	
71.60	
63.77	1.125
61.54	
54.81	
49.16	
45.27	1.375
38.20	
31.73	
24.29	
20.06	
22.83	0.750
19.83	1.125
17.51	1.375
15.29	1.625
12.98	
11.33	
10.66	
9.15	
6.78	
5.75	
4.73	
4.06	

R97	
Ratio *i*	Input Dia
199.06	1.125
181.06	
166.33	
144.53	
127.61	
111.42	
97.76	
94.59	
85.35	1.375
82.59	
77.70	
72.46	
66.71	
63.27	
59.52	
51.10	
44.57	
37.84	1.625
28.98	
25.31	
33.00	1.125
29.10	
21.23	1.625
16.96	1.875
13.56	
10.00	
8.49	
6.78	
5.42	
4.00	

Solid Input Shaft
M..D

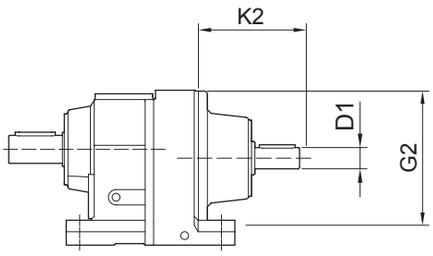

FIG 1

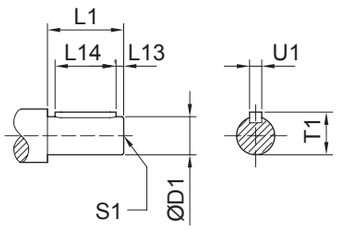

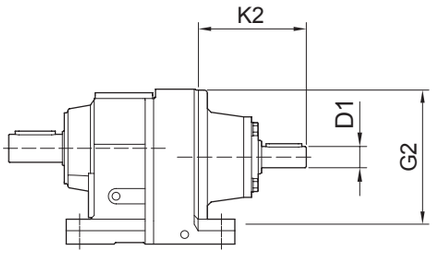

FIG 2

Size	D1	L1	L13	L14	T1	U1	S1	K2	G2	FIG
M..17	0.625	1.57	0.25	1.26	0.7	0.1875	1/4-20*0.63	3.90	-	1
M..107	1.375	3.15	0.35	2.76	1.51	0.3125	1/2-13*1.12	5.91	13.78	2
	1.625	4.33	0.58	2.76	1.79	0.3750	5/8-11*1.38	8.78	13.78	2
	1.875	4.33	0.64	3.15	2.09	0.5000	5/8-11*1.38	8.98	13.78	2
M..137	1.625	4.33	0.58	2.76	1.79	0.3750	5/8-11*1.38	8.39	15.75	2
	1.875	4.33	0.68	3.15	2.09	0.5000	5/8-11*1.38	8.54	15.75	2
	2.125	4.33	0.64	3.54	2.35	0.5000	3/4-10*1.61	10.20	15.75	2
M..147	1.625	4.33	0.58	2.76	1.79	0.3750	5/8-11*1.38	8.07	17.72	2
	1.875	4.33	0.64	3.15	2.09	0.5000	5/8-11*1.38	8.23	17.72	2
	2.125	4.33	0.64	3.54	2.35	0.5000	3/4-10*1.61	10.04	17.72	2
	2.750	4.51	0.90	4.33	3.03	0.6250	3/4-10*1.61	12.68	17.72	2
M..167	1.625	4.33	0.58	2.76	1.79	0.3750	5/8-11*1.38	8.03	21.65	2
	1.875	4.33	0.64	3.15	2.09	0.5000	5/8-11*1.38	8.23	21.65	2
	2.125	4.33	0.64	3.54	2.35	0.5000	3/4-10*1.61	9.69	21.65	2
	2.750	5.51	0.90	4.33	3.03	0.6250	3/4-10*1.61	12.44	21.65	2

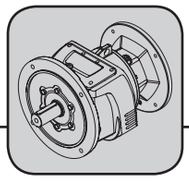

R17	
Ratio *i*	Input Dia
79.85	0.625
68.73	
59.23	
49.90	
45.45	
39.61	
35.17	
29.36	
24.76	
19.69	
15.02	
12.65	
10.04	
7.44	
4.99	
4.05	

R107	
Ratio *i*	Input Dia
115.50	1.375
106.76	
103.02	
86.50	
79.95	
68.27	
62.90	1.625
53.71	
53.00	
44.50	
39.52	1.875
34.23	
29.23	
25.52	
21.79	
13.09	
24.40	1.375
21.77	
14.38	1.625
10.44	1.875
4.50	
4.00	

R137	
Ratio *i*	Input Dia
117.25	1.625
107.80	
99.66	
91.63	
79.05	
70.35	
59.14	1.875
54.38	
50.13	
44.49	
43.25	
35.39	
32.81	2.125
24.24	
20.68	
14.60	
23.45	1.625
21.56	
17.15	
14.96	2.125
13.75	
10.12	
8.05	
4.87	
4.04	

R147	
Ratio *i*	Input Dia
117.29	1.625
109.03	
99.44	1.875
89.86	
83.30	
70.80	
60.38	
50.49	2.125
44.98	
41.70	
35.44	
30.23	
25.27	2.75
19.99	
19.82	2.125
15.62	
13.32	2.75
10.24	
5.00	
4.16	

R167	
Ratio *i*	Input Dia
178.17	1.625
169.42	
158.37	
139.60	
121.56	1.875
109.89	
101.64	
88.17	
80.58	
69.80	
60.56	2.125
53.92	
48.52	
43.86	
35.19	2.75
27.86	
21.19	
23.78	2.125
19.89	2.75
15.77	
13.66	
10.39	
5.10	
3.93	

3.5 Dimension Sheets

RX type

XHN57

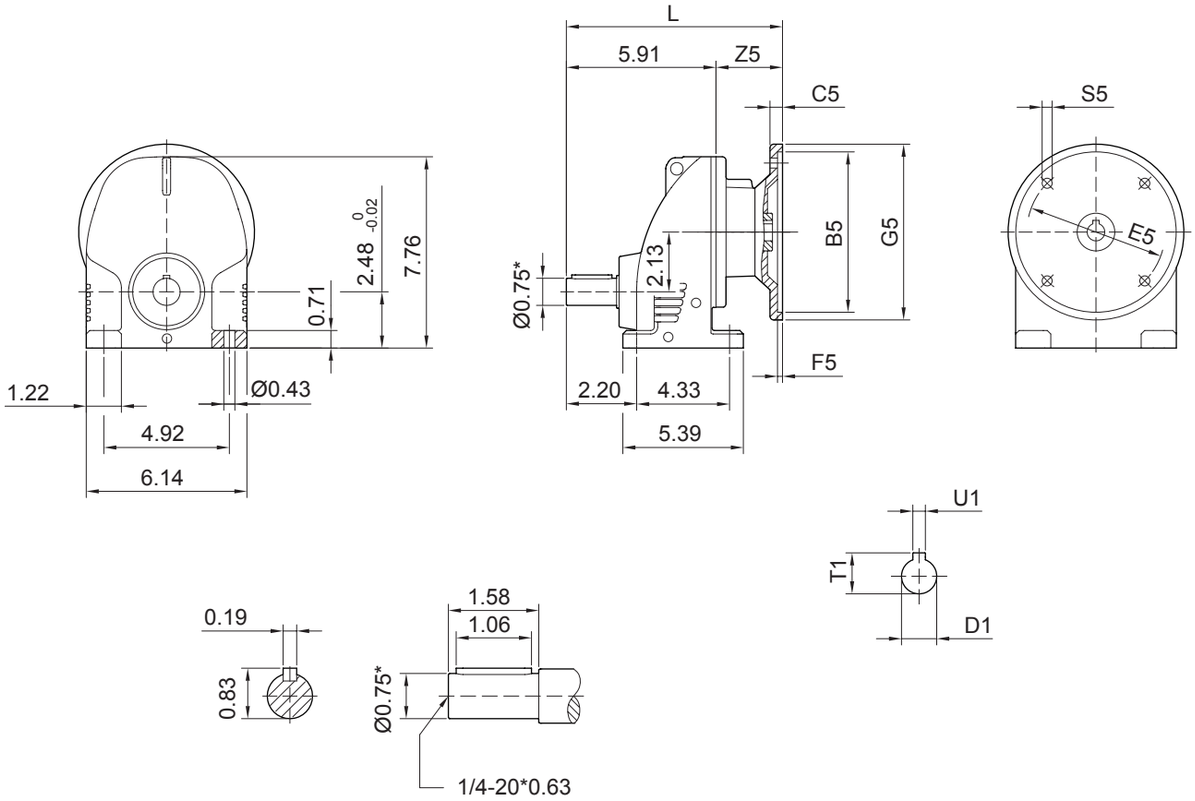

*Refer page17 for tolerance information.
For the dimension concerning the solid input shaft, please refer to the table shown at page94.

Frame	B5	C5	E5	F5	G5	L	S5	Z5	D1	T1	U1
AM56	4.50	0.39	5.875	0.16	6.50	8.13	0.41	2.22	0.625	0.71	0.188
AM143/145	4.50	0.47	5.875	0.20	6.50	8.52	0.41	2.62	0.875	0.96	0.188
AM182/184	8.50	0.67	7.250	0.20	9.00	9.25	0.55	3.35	1.125	1.24	0.250

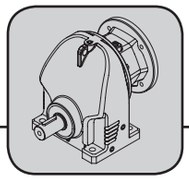

XHN67

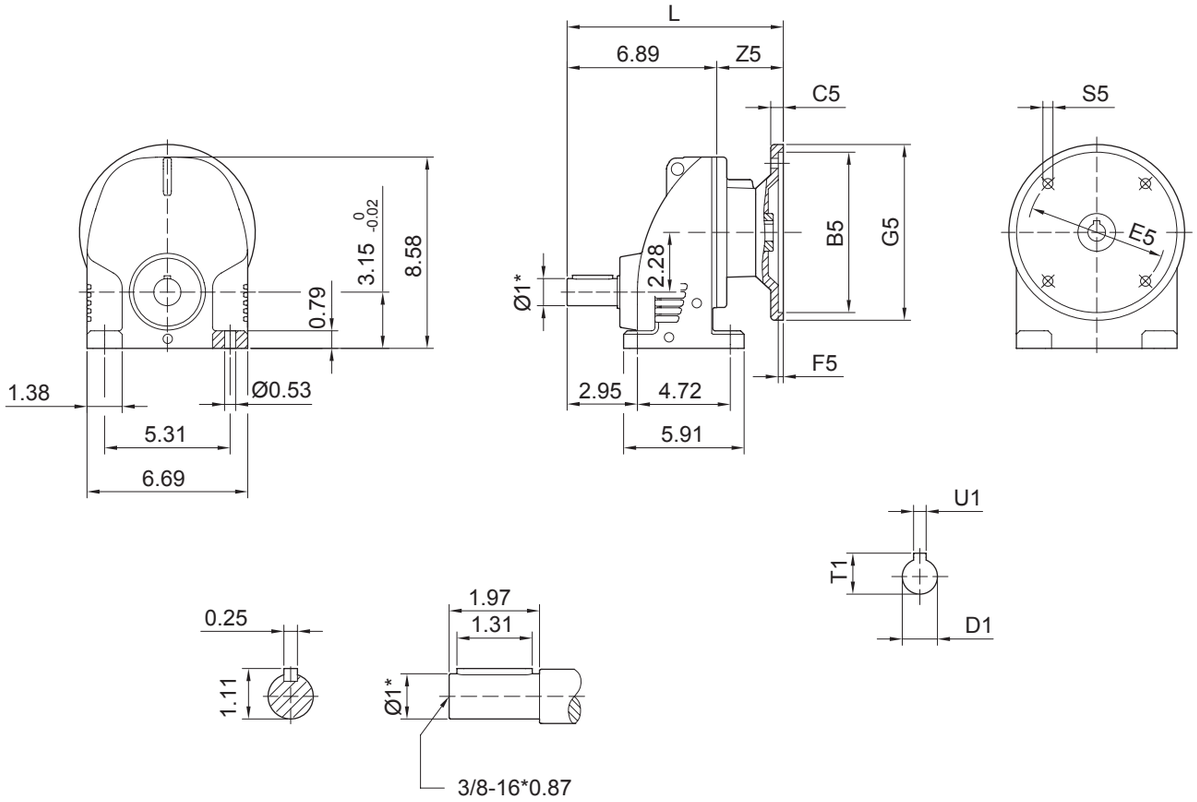

*Refer page17 for tolerance information.
For the dimension concerning the solid input shaft, please refer to the table shown at page94.

Frame	B5	C5	E5	F5	G5	L	S5	Z5	D1	T1	U1
AM56	4.50	0.39	5.875	0.16	6.50	9.04	0.41	2.15	0.625	0.71	0.188
AM143/145	4.50	0.47	5.875	0.20	6.50	9.43	0.41	2.54	0.875	0.96	0.188
AM182/184	8.50	0.67	7.250	0.20	9.00	10.16	0.55	3.27	1.125	1.24	0.250

XHN77

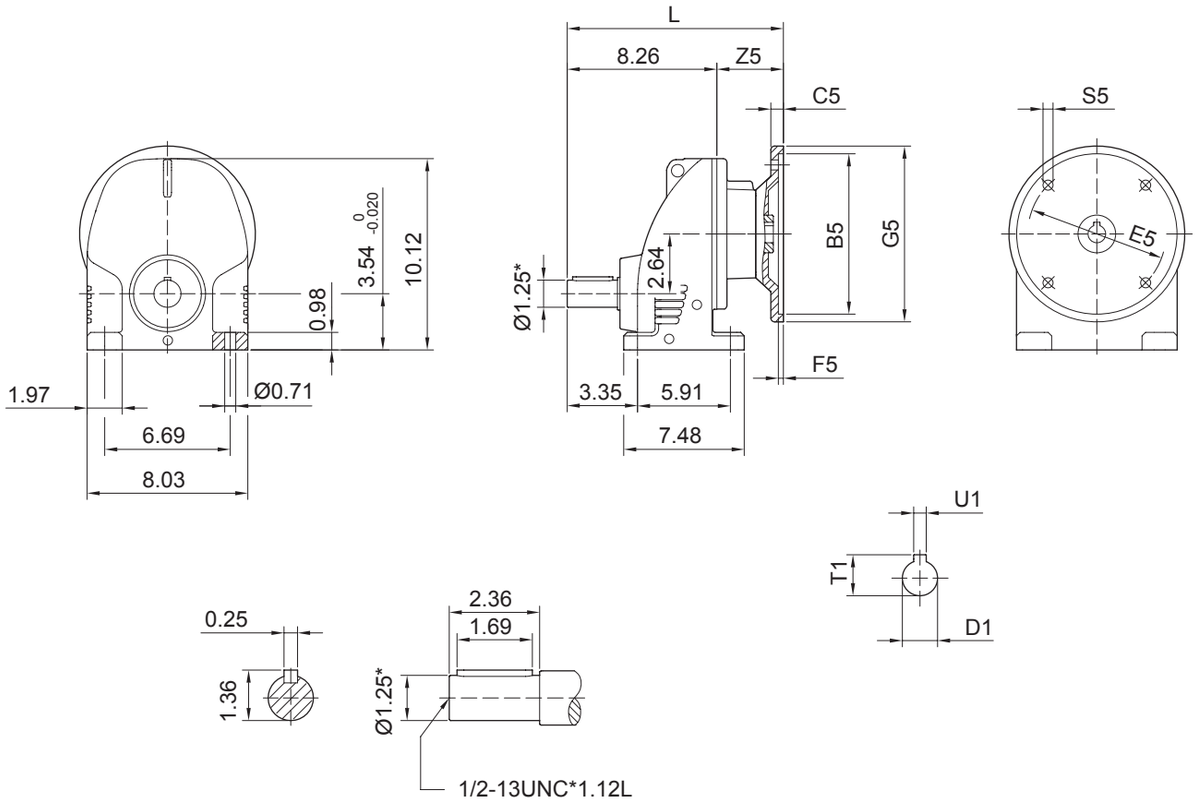

3

*Refer page17 for tolerance information.
For the dimension concerning the solid input shaft, please refer to the table shown at page94.

Frame	B5	C5	E5	F5	G5	L	S5	Z5	D1	T1	U1
AM56	4.50	0.39	5.875	0.16	6.50	10.58	0.41	2.32	0.625	0.71	0.188
AM143/145	4.50	0.47	5.875	0.20	6.50	10.58	0.41	2.32	0.875	0.96	0.188
AM182/184	8.50	0.67	7.250	0.20	9.00	11.31	0.55	3.05	1.125	1.24	0.250
AM213/215	8.50	0.67	7.250	0.20	9.00	13.57	0.55	5.31	1.375	1.52	0.312

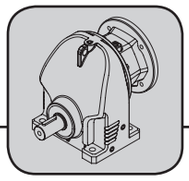

XHN87

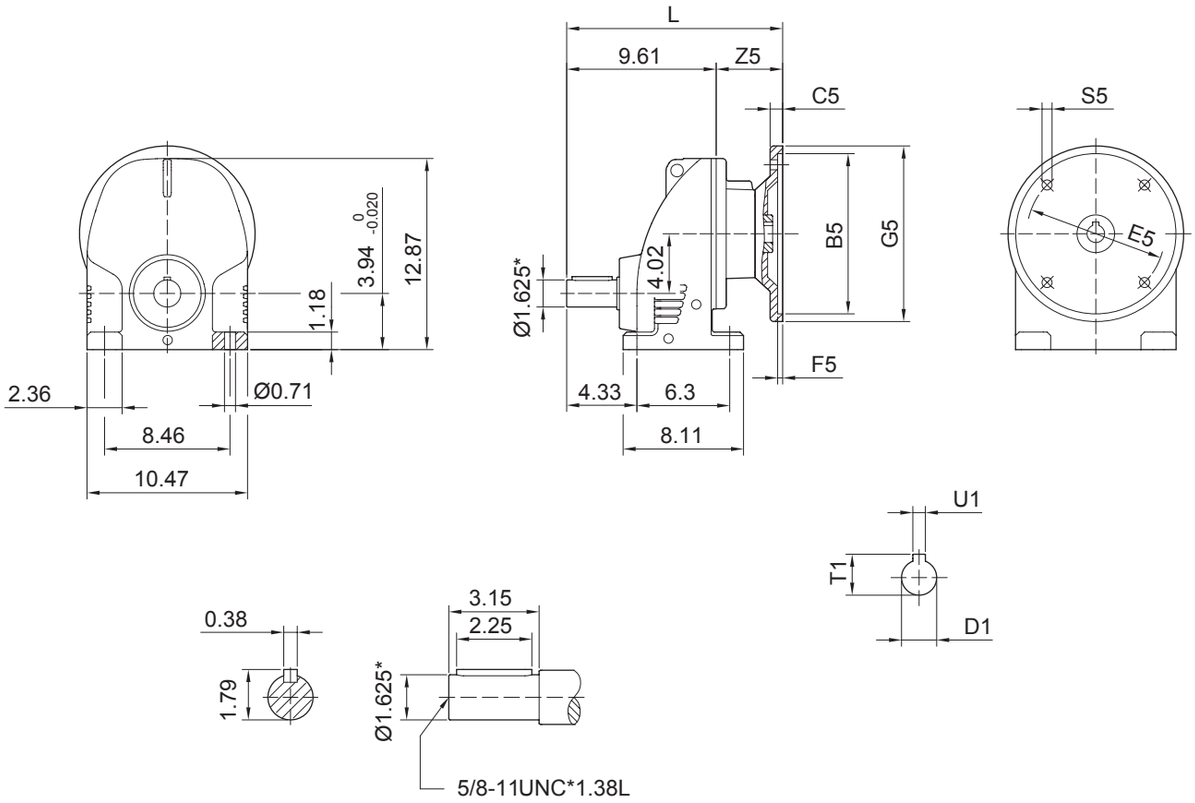

3

*Refer page17 for tolerance information.
For the dimension concerning the solid input shaft, please refer to the table shown at page94.

Frame	B5	C5	E5	F5	G5	L	S5	Z5	D1	T1	U1
AM182/184	8.50	0.67	7.250	0.20	9.00	12.28	0.55	2.68	1.125	1.24	0.250
AM213/215	8.50	0.67	7.250	0.20	9.00	14.55	0.55	4.94	1.375	1.52	0.312
AM254/256	8.50	0.79	7.250	0.20	10.00	15.53	0.55	5.93	1.625	1.80	0.375

XHN97

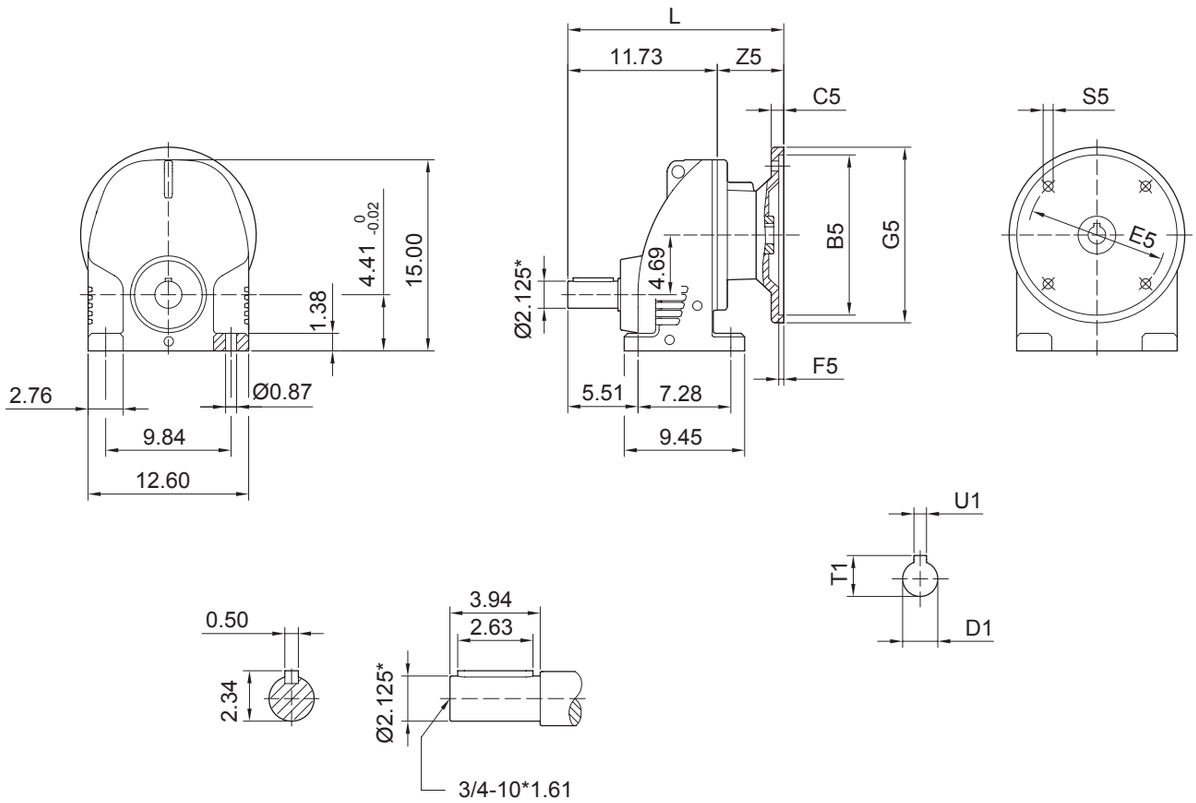

3

*Refer page17 for tolerance information.
For the dimension concerning the solid input shaft, please refer to the table shown at page94.

Frame	B5	C5	E5	F5	G5	L	S5	Z5	D1	T1	U1
AM182/184	8.50	0.67	7.250	0.20	9.00	14.25	0.55	2.50	1.125	1.24	0.250
AM213/215	8.50	0.67	7.250	0.20	9.00	16.36	0.55	4.63	1.375	1.52	0.312
AM254/256	8.50	0.79	7.250	0.20	10.00	17.34	0.55	5.61	1.625	1.80	0.375
AM284/286	10.50	0.79	9.000	0.20	11.26	17.70	0.59	5.96	1.875	2.10	0.500
AM324	12.50	0.79	11.000	0.20	14.02	18.92	0.65	7.19	2.125	2.35	0.500

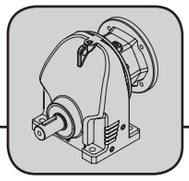

XHN107

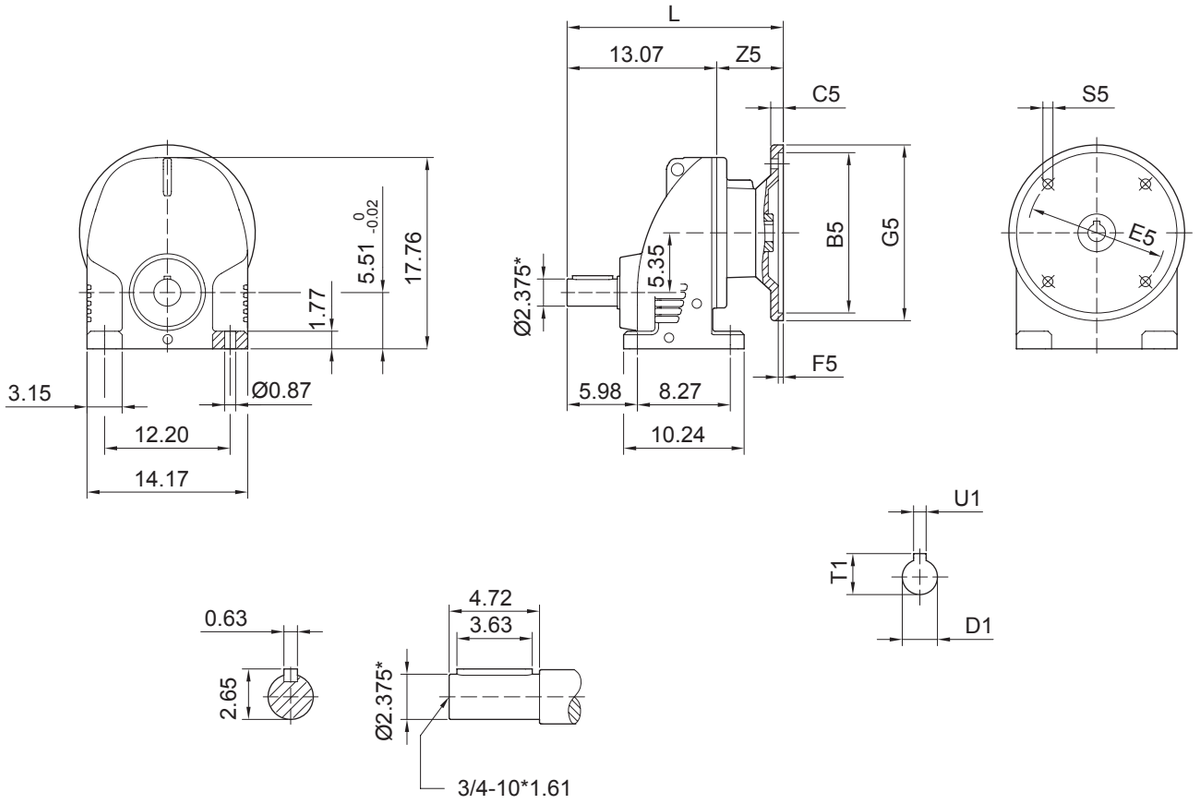

3

*Refer page17 for tolerance information.
For the dimension concerning the solid input shaft, please refer to the table shown at page94.

Frame	B5	C5	E5	F5	G5	L	S5	Z5	D1	T1	U1
AM182/184	8.50	0.67	7.250	0.20	9.00	15.59	0.55	2.52	1.125	1.24	0.250
AM213/215	8.50	0.67	7.250	0.20	9.00	17.32	0.55	4.25	1.375	1.52	0.312
AM254/256	8.50	0.79	7.250	0.20	10.00	18.31	0.55	5.24	1.625	1.80	0.375
AM284/286	10.50	0.79	9.000	0.20	11.26	18.66	0.59	5.59	1.875	2.10	0.500
AM324/326	12.50	0.79	11.000	0.20	14.02	19.88	0.65	6.81	2.125	2.35	0.500

Solid Input Shaft
X..D

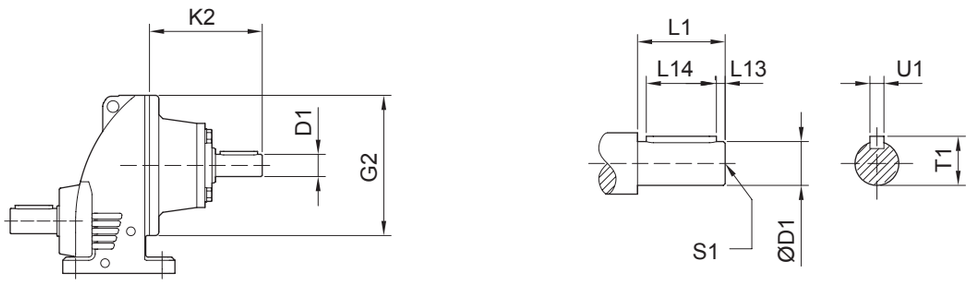

Size	D1	L1	L13	L14	T1	U1	S1	K2	G2
X..57	0.750	1.57	0.25	1.26	0.83	0.1875	1/4-20*0.63	4.39	6.3
	0.875	1.97	0.29	1.57	0.96	0.1875	5/16-18*0.87	4.70	6.3
X..67	0.750	1.57	0.25	1.26	0.83	0.1875	1/4-20*0.63	4.39	6.3
	0.875	1.97	0.29	1.57	0.96	0.1875	5/16-18*0.87	4.70	6.3
X..77	0.750	1.57	0.25	1.26	0.83	0.1875	1/4-20*0.63	4.17	7.87
	0.875	1.967	0.29	1.57	0.96	0.1875	5/16-18*0.87	4.49	7.87
	1.375	3.14	0.35	2.76	1.51	0.3125	1/2-13*1.12	6.97	7.87
X..87	0.750	1.57	0.25	1.26	0.83	0.1875	1/4-20*0.63	3.80	9.84
	1.125	2.36	0.32	1.97	1.24	0.2500	3/8-16*0.87	4.50	9.84
	1.375	3.14	0.35	2.76	1.51	0.3125	1/2-13*1.12	6.59	9.84
	1.625	4.33	0.58	2.76	1.79	0.3750	5/8-11*1.38	9.47	9.84
X..97	1.125	2.36	0.32	1.97	1.24	0.2500	3/8-16*0.87	4.35	11.81
	1.375	3.14	0.35	2.76	1.51	0.3125	1/2-13*1.12	6.28	11.81
	1.625	4.33	0.58	2.76	1.79	0.3750	5/8-11*1.38	9.15	11.81
	1.875	4.33	0.64	3.15	2.09	0.5000	5/8-11*1.38	9.35	11.81
X..107	1.125	2.36	0.32	1.97	1.24	0.2500	3/8-16*0.87	4.35	13.78
	1.375	3.14	0.35	2.76	1.51	0.3125	1/2-13*1.12	5.90	13.78
	1.625	4.33	0.58	2.76	1.79	0.3750	5/8-11*1.38	8.87	13.78
	1.875	4.33	0.64	3.15	2.09	0.5000	5/8-11*1.38	9.35	13.78

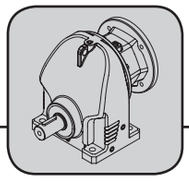

RX57	
Ratio *i*	Input Dia
5.47	0.750
4.88	
4.55	
4.05	
3.63	
3.19	
3.00	
2.23	
1.59	0.875
1.31	

RX67	
Ratio *i*	Input Dia
6.27	0.750
5.47	
4.95	
4.53	
3.52	
2.89	
2.72	0.875
2.35	
1.86	
1.62	
1.4	

RX77	
Ratio *i*	Input Dia
8.09	0.750
7.50	
6.69	
6.00	
5.12	
4.74	
4.55	
4.19	
3.75	
3.25	
2.67	0.875
2.38	1.375
2.13	
1.96	
1.66	

RX87	
Ratio *i*	Input Dia
5.50	0.750
4.85	1.125
4.43	
3.77	1.375
3.54	
3.19	
2.83	
2.52	1.625
2.26	
2.14	
2.04	
1.67	

RX97	
Ratio *i*	Input Dia
5.65	1.125
4.96	1.375
4.42	
3.81	1.625
3.48	
3.07	
2.68	1.875
2.32	
2.25	
2.12	
1.89	
1.71	

RX107	
Ratio *i*	Input Dia
6.38	1.125
5.50	1.375
4.90	1.625
4.13	
3.37	1.875
3.12	
2.30	
1.91	
1.39	

3.6 Dimension Sheets

Double Reduction Gear Unit

LNN/MNN

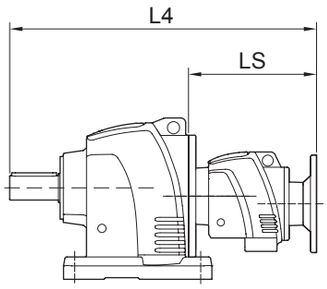

Size	Frame	LS	L4
L..47-37	AM56	8.93	18.33
	AM143	9.33	18.73
	AM145	9.33	18.73
L..57-37	AM56	8.86	18.97
	AM143	9.25	19.36
	AM145	9.25	19.36
L..67-37	AM56	8.86	19.84
	AM143	9.25	20.23
	AM145	9.25	20.23
L..77-37	AM56	8.64	20.54
	AM143	9.04	20.94
	AM145	9.04	20.94
L..87-57	AM56	9.9	24.54
	AM143	10.3	24.54
	AM145	10.3	24.94
	AM182	11.03	25.67
	AM184	11.03	25.67
L..97-57	AM56	9.58	26.9
	AM143	9.98	27.3
	AM145	9.98	27.3
	AM182	10.72	28.04
	AM184	10.72	28.04
M..107-77	AM56	11.75	31.23
	AM143	11.75	31.23
	AM145	11.75	31.23
	AM182	12.48	31.96
	AM184	12.48	31.96
	AM213	14.74	34.22
	AM215	14.74	34.22
M..137-77	AM56	11.32	34.54
	AM143	11.32	34.54
	AM145	11.32	34.54
	AM182	12.05	35.27
	AM184	12.05	35.27
	AM213	14.30	37.53
	AM215	14.31	37.53

LXN/MXN

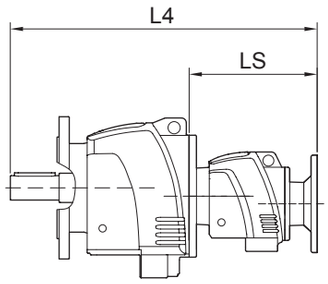

Size	Frame	LS	L4
M..147-77	AM56	11.32	38.78
	AM143	11.32	38.78
	AM145	11.32	38.78
	AM182	12.05	39.51
	AM184	12.05	39.51
	AM213	14.31	41.77
	AM215	14.31	41.77
M..147-87	AM184	13.62	41.08
	AM213	15.88	43.34
	AM215	15.88	43.34
	AM254	16.87	44.33
	AM256	16.87	44.33
M..167-97	AM182	15.32	46.42
	AM184	15.32	46.42
	AM213	17.48	48.58
	AM215	17.48	48.58
	AM254	18.41	49.51
	AM256	18.41	49.51
	AM284	18.76	49.86
M..167-107	AM182	16.89	47.99
	AM184	16.89	47.99
	AM213	18.62	49.72
	AM215	18.62	49.72
	AM254	19.61	50.71
	AM256	19.61	50.71
	AM284	19.96	51.06
	AM286	19.96	51.06
	AM324	21.18	52.28
	AM326	21.18	52.28

CHENTA

成大精機工業股份有限公司
CHENTA GEAR SPEED REDUCER

CHENTA PRECISION MACHINERY IND.INC.
JEN WU MACHINERY CO., LTD.
Http://www.chentagear.com.tw

總 公 司
Head Office / Plant

台灣高雄市814仁武區鳳仁路後庄巷118號
NO. 118 HALL TRAN LANE, JEN WU,
KAOHSIUNG COUNTY, TAIWAN

Tel:886-7-3727007
Fax:886-7-3727267
Http://www.chenta.com
E-mail:sales@chenta.com

美國公司
U.S.A Office

GearKing, Inc. / CHENTA GEAR U.S.A

Tel:1-949-579-2789
Fax:1-949-206-0868
E-mail: usa@chenta.com

上海公司
Shanghai Plant

上海市嘉定區馬陸鎮上海機械工業園區
敬學路158號 郵編：201801
NO. 158 JING-XUE ROAD, MA-LU TOWN,
JIA-DING DISTRICT, SHANGHAI, CHINA.
ZIP CODE:20801

Tel:86-21-69156255
Fax:86-21-69156605
E-mail: cysd@chenta.com

HR-2015.12-I-U

CHENTA GEAR SPEED REDUCER
HR-IMPERIAL
2015.12